SEMESTER 2

PERIOD: MAY 2022 – AUGUST 2022

RAJAGIRI SCHOOL OF ENGINEERING & TECHNOLOGY

Department of Information Technology
Programme: Artificial Intelligence and Data Science

- **Vision**

To evolve into a center of excellence in information technology by creation and exchange of knowledgethroughleadingedgeresearch,innovationandservices,whichwillinturncontribute towardssolvingcomplexsocietalproblemsandthusbuildingapeacefulandprosperousmankind.

- **Mission**

Toimparthighqualitytechnicaleducation,researchtraining,professionalismandstrongethical valuesintheyoungmindsforensuringtheirproductivecareersinindustryandacademiasoasto workwithacommitmenttothebettermentofmankind.

- **Programme Educational Objectives(PEO)**

Graduates of Artificial Intelligence and Data Science program shall

PEO1: Havestrongtechnicalfoundationforsuccessfulprofessionalcareersandtoevolveaskey-players/entrepreneursinthefieldofinformationtechnology.

PEO 2: Excel in analyzing, formulating and solving engineering problems to promote life-long learning, to develop applications, resulting in the betterment of the society.

PEO 3: Have leadership skills and awareness on professional ethics and codes.

- **Programme Outcomes(PO)**

Artificial Intelligence and Data Science Program Students will be able to:

PO1. Engineering knowledge: Apply the knowledge of mathematics, science, engineering fundamentals,andanengineeringspecializationtothesolutionofcomplexengineeringproblems. **PO2. Problem analysis:** Identify, formulate, review research literature, and analyze complex engineeringproblemsreachingsubstantiatedconclusionsusingfirstprinciplesofmathematics, natural sciences, and engineeringsciences.

PO3.Design/developmentofsolutions: Designsolutionsforcomplexengineeringproblemsand design system components or processes that meet the specified needs with appropriate consideration for the public health and safety, and the cultural, societal, and environmental considerations.

PO4. Conduct investigations of complex problems: Use research-based knowledge andresearch methodsincludingdesignofexperiments,analysisandinterpretationofdata,andsynthesisofthe information to provide validconclusions.

PO5.Moderntoolusage: Create,select,andapplyappropriatetechniques,resources,andmodern engineeringandITtoolsincludingpredictionandmodelingtocomplexengineeringactivitieswith an understanding of thelimitations.

PO6.Theengineerandsociety: Applyreasoninginformedbythecontextualknowledgetoassess societal,health,safety,legalandculturalissuesandtheconsequentresponsibilitiesrelevanttothe professional engineeringpractice.

PO7.Environment and sustainability: Understand the impact of the professional engineering solutionsinsocietalandenvironmentalcontexts,anddemonstratetheknowledgeof,andneedfor sustainabledevelopment.

PO8.Ethics: Apply ethical principles and commit to professional ethics and responsibilitiesand norms of the engineeringpractice.

PO9.Individualandteamwork: Functioneffectivelyasanindividual,andasamemberorleaderin diverse teams, and in multidisciplinarysettings.

PO10.Communication: Communicate effectively on complex engineering activities with the engineering community and with society at large, such as, being able to comprehend and write effective reports and design documentation, make effective presentations, and give and receive clear instructions.

PO11.Project management and finance: Demonstrate knowledge and understanding of the engineering and management principles and apply these to one's own work, as a member and leader in a team, to manage projects and in multidisciplinary environments.

PO12.Life-longlearning: Recognizetheneedfor,andhavethepreparationandabilitytoengagein independentandlife-longlearninginthebroadestcontextoftechnologicalchange.

Program Specific Outcomes (PSO)

Artificial Intelligence and Data Science *Program Students will be able to:*

PSO1: Applythefundamentalsofscience,engineeringandmathematicstounderstand,analyzeand developsolutionsintheareasrelatedtoartificialintelligenceanddatascienceforoptimaldesign of intelligentsystems.

PSO2: Design and Implement appropriate techniques and analytic tools for the integration of intelligent systems, with a view to engaging in lifelong learning for the betterment of society.

PSO3: Practice professional ethics in applying scientific method to model and support multi-disciplinary facets of engineering and its societal implications.

INDEX

101908/MA200A

VECTOR CALCULUS, DIFFERENTIAL EQUATIONS & TRANSFORMS

101908/MA200A VECTOR CALCULUS DIFFERENTIAL EQUATIONS AND TRANSFORMS

COURSE INFORMATION SHEET

PROGRAMME: COMMON	*DEGREE: BTECH*
PROGRAMME: AD	DEGREE: **B. TECH** UNIVERSITY**: A P J ABDUL KALAM TECHNOLOGICAL UNIVERSITY**
COURSE: VECTOR CALCULUS DIFFERENTIAL EQUATIONS AND TRANSFORMS	SEMESTER**: II** CREDITS: **4**
COURSE CODE: 101908/ MA200A ***REGULATION: UG***	COURSE TYPE: **CORE**
COURSE AREA/DOMAIN: ENGINEERING MATHEMATICS	CONTACT HOURS: **3+1 (Tutorial) hours/Week.**

SYLLABUS:

UNIT	*DETAILS*	*HOURS*
I	Module 1 (Calculus of vector functions) (Text 1: Relevant topics from sections 12.1, 12.2, 12.6, 13.6, 15.1, 15.2, 15.3) Vector valued function of single variable, derivative of vector function and geometrical interpretation, motion along a curve-velocity, speed and acceleration. Concept of scalar and vector fields , Gradient and its properties, directional derivative , divergence and curl, Line integrals of vector fields, work as line integral, Conservative vector fields , independence of path and potential function(results without proof).	9
II	Module 2 (Vector integral theorems) (Text 1: Relevant topics from sections 15.4, 15.5, 15.6, 15.7, 15.8) Green's theorem (for simply connected domains, without proof) and applications to evaluating line integrals and finding areas. Surface integrals over surfaces of the form z = g(x, y), y = g(x, z) or x =g(y, z) , Flux integrals over surfaces of the form z = g(x, y), y = g(x, z) or x = g(y, z), divergence theorem (without proof) and its applications to finding flux integrals, Stokes' theorem (without proof) and its applications to finding line integrals of vector fields and work done	9
	(For practice and submission as assignment only: Plots of partial sums of Fourier series and demonstrations of convergence using plotting software)	
III	Module- 3 (Ordinary differential equations) (Text 2: Relevant topics from sections 2.1, 2.2, 2.5, 2.6, 2.7, 2.10, 3.1, 3.2, 3.3) Homogenous linear differential equation of second order, superposition principle, general solution,homogenous linear ODEs with constant coefficients-general solution. Solution of Euler-Cauchy equations (second order only).Existence and uniqueness (without proof). Non homogenous linear-general solution, solution by the method of undetermined coefficients (for the right hand side of the form $x^n, e^{kx}, sinax, cosax, e^{kx}sinax, e^{kx}cosaxand$ their	9

	linear combinations), methods of variation of parameters. Solution of higher order equations-homogeneous and non-homogeneous with constant coefficient using method of undetermined coefficient.	
IV	Module- 4 (Laplace transforms) (Text 2: Relevant topics from sections 6.1,6.2,6.3,6.4,6.5) Laplace Transform and its inverse ,Existence theorem (without proof) , linearity,Laplace transform of basic functions, first shifting theorem, Laplace transform of derivatives and integrals, solution of differential equations using Laplace transform, Unit step function, Second shifting theorems. Dirac delta function and its Laplace transform, Solution of ordinary differential equation involving unit step function and Dirac delta functions. Convolution theorem(without proof)and its application to finding inverse Laplace transform of products of functions	10
V	Module-5 (Fourier Tranforms) (Text 2: Relevant topics from sections 11.7,11.8, 11.9) Fourier integral representation, Fourier sine and cosine integrals. Fourier sine and cosine transforms, inverse sine and cosine transform. Fourier transform and inverse Fourier transform, basic properties.The Fourier transform of derivatives. Convolution theorem (without proof)	8
TOTAL HOURS		**45**

TEXT/REFERENCE BOOKS:

T/R	***BOOK TITLE/AUTHORS/PUBLICATION***
T1	H. Anton, I. Biven S.Davis, “Calculus”, Wiley, 10th edition, 2015
T2	Erwin Kreyszig, “Advanced Engineering Mathematics”, Wiley, 10th edition, 2015.

R1	J. Stewart, Essential Calculus, Cengage, 2nd edition, 2017
R2	G.B. Thomas and R.L. Finney, Calculus and Analytic geometry, 9 th Edition, Pearson,Reprint,2002
R3	Peter O Neil, Advanced Engineering Mathematics, 7th Edition, Thomson, 2007.
R4	Louis C Barret, C Ray Wylie, "Advanced Engineering Mathematics", Tata McGraw Hill, 6th edition, 2003
R5	VeerarajanT."Engineering Mathematics for first year", Tata McGraw - Hill, 2008
R6	B.S. Grewal, Higher Engineering Mathematics, Khanna Publishers, 36th edition , 2010
R7	Srimanta Pal, Subodh C. Bhunia, "Engineering Mathematics", Oxford University Press,2015
R8	Ronald N. Bracewell, "The Fourier Transform and its Applications", McGraw – Hill International Editions, 2000.

COURSE PREREQUISITES:

C.CODE	*COURSE NAME*	*DESCRIPTION*	*SEM*
	A basic course in vector calculus, Differential equations and integration	To develop basic ideas on vector differentiation, vector integration ,applications and differential equations.	

COURSE OBJECTIVES:

1	To familiarize the concepts and applications of differentiation and integration of vector valued functions.
2	To understand the concept of ordinary differential equations which have many applications in engineering.
3	To apply the basic transforms such as Laplace and Fourier transform which are invaluable for any engineer's mathematical toolbox.

COURSE OUTCOMES:

SNO	***DESCRIPTION***	***Bloom's Taxonomy Level***
CO 1	**Apply** the concept of differentiation and integration of vector valued functions in various fields of Engineering.	Apply (Level 3)
CO 2	**Evaluate** the surface and volume integrals and learn their inter-relations and applications.	Evaluate (Level 5)
CO 3	**Remember** and solve homogeneous and non-homogeneous linear differential equations with constant coefficients.	Remember (Level 1)

CO 4	**Analyze the** Laplace transform and apply them to solve ODEs arising in engineering.	Analyse (Level 4)
CO 5	**Understand** the Fourier transforms of functions and apply them to solve problems arising engineering	Understand (Level 2)

CO-PO AND CO-PSO MAPPING

	PO 1	***PO 2***	***PO 3***	***PO 4***	***PO 5***	***PO 6***	***PO 7***	***PO 8***	***PO 9***	***PO 10***	***PO 11***	***PO 12***	***PSO 1***	***PSO 2***	***PSO 3***
CO 1	3	3	3	3	2	1				2		2	2		
CO 2	3	3	3	3	2	1				2		2	2		
CO 3	3	3	3	3	2	1				2		2	2		

CO 4	3	3	3	3	2	1				2		2	2		
CO 5	3	3	3	3	2	1				2		2	2		

JUSTIFICATIONS FOR CO-PO MAPPING

MAPPING	***LOW/MEDIUM/ HIGH***	***JUSTIFICATION***
CO 1-PO 1	3	Applying the concept of differentiation and integration of vector valued functions we can solve various types of engineering problems.
CO 1-PO 2	3	Vector calculus can be used to reduce complex engineering problems into a simpler one.
CO 1-PO 3	3	We can design solutions to engineering problems which involves vector valued functions
CO 1-PO 4	3	Using the concept of differentiation and integration of vector valued functions we can analyse and interpret functions of multiple variables in engineering.
CO 1-PO 5	2	Apply appropriate techniques in modelling ,various complex engineering problems using the techniques in vector calculus

CO 1-PO 6	1	Fundamental knowledge in vector calculus helps to assess various safety issues relevant to the professional engineering practice
CO 1-PO 10	2	The common knowledge of vector calculus makes it easier to communicate ideas effectively
CO 1-PO 12	2	Able to engage in independent and lifelong learning in the broadest context of technological change
CO 2-PO 1	3	Basic knowledge in vector integral calculus helps in solving engineering problems
CO 2-PO 2	3	Vector integration can be applied to analyze deterministic systems that have multiple degrees of freedom
CO 2-PO 3	3	Vector integration is used in many fields of natural and social science and engineering to model and study high-dimensional systems
CO 2-PO 4	3	Most of the natural phenomenon is non-linear and that can be best described by using vector calculus and partial differential equation
CO 2-PO 5	2	Vector calculus can be used to optimise functions of two or more variables
CO 2-PO 6	1	The concept of vector calculus helps to assess societal, health, safety, legal and cultural issues.
CO 2-PO 10	2	Effective communication helps the engineering community to give and receive clear instructions.

CO 2-PO 12	2	Study, experience, and practice of the fundamentals of vector integration will allow for further learning in the context of technological change
CO 3-PO 1	3	Basic knowledge of differential equations is used to create mathematical models in order to arrive at an optimal solution
CO 3-PO 2	3	Differential equations help to analyse complex engineering problems to reach substantiated conclusions
CO 3-PO 3	3	Application of differential equations help in designing solutions for engineering problems
CO 3-PO 4	3	Modelling using differential equations can help in better design of research and experiments
CO 3-PO 5	2	Differential equations gives the engineer new techniques and methods for prediction and modelling
CO 3-PO 6	1	Differential equations can be used to find the optimal solution, or the extrema for various problems
CO 3-PO 10	2	Effective presentations and clear instructions can be done using differential equations
CO 3-PO 12	2	In the new era of technology, application of differential equations is used in the creation of new knowledge and learning of new techniques
CO 4-PO 1	3	Laplace transforms make solving complex differential equations easier

CO 4-PO 2	3	Knowledge of Laplace transforms broaden the research literature and information available to the engineer
CO 4-PO 3	3	To meet the specified needs for the public health and safety, solutions of differential equations using Laplace transforms can be applied widely
CO 4-PO 4	3	Laplace transforms are used for interpreting and analysing the data in engineering field
CO 4-PO 5	2	Laplace transforms can be used to create new programs for solving various models and making predictions from them
CO 4-PO 6	1	Modelling, using differential equations and Laplace transforms can be applied to assess societal, legal and cultural issues.
CO 4-PO 10	2	Laplace transforms allow the engineer to communicate effectively on various complex engineering problems
CO 4-PO 12	2	Learning the fundamentals of Laplace transforms will increase learning skills, which will in turn foster lifelong independent learning
CO 5-PO 1	3	Knowledge ofFourier integrals and transforms provides different techniques in solving engineering problems
CO 5-PO 2	3	Identify and analyse the signals in electronics and communication using Fourier integrals and transforms
CO 5-PO 3	3	Fourier integrals can be used to design and develop solutions for problems with societal, cultural and environmental implications

CO 5-PO 4	3	Fourier transforms can be used to analyse new research literature and help in solving new complex problems
CO 5-PO 5	2	Modern IT and engineering tools can be created to apply Fourier integrals and transforms for solution of engineering problems
CO 5-PO 6	1	Application of Fourier transforms and integrals in context to assess societal issues
CO 5-PO 10	2	The ability to determine Fourier transforms and use them to solve problems will allow for effective communication
CO 5-PO 12	2	Good learning skills will improve independent and life-long learning with help of Fourier transforms

JUSTIFICATIONS FOR CO-PSO MAPPING

MAPPING	***LOW/MEDIUM / HIGH***	***JUSTIFICATION***
CO3-PSO1	2	Various circuits can be modelled by ordinary differential equations
CO4-PSO1	3	Laplace transforms are used in areas like system theory, network theory.
CO5-PSO1	3	Fourier transforms are applied in areas like circuit analysis and signal processing.

GAPS IN THE SYLLABUS - TO MEET INDUSTRY/PROFESSIONAL REQUIREMENTS:

SNO	*DESCRIPTION*	*RELEVANCE TO PO*	*PROPOSED ACTIONS*	*RELEVANCE*
1	Basic notation and arithmetic of vectors		Reading	1
2	Applications of vector calculus		Reading / Assignment	1
3	Application of Fourier and Laplace transforms		Reading / Assignment	1

PROPOSED ACTIONS: TOPICS BEYOND SYLLABUS/ASSIGNMENT/INDUSTRY VISIT/GUEST LECTURER/NPTEL ETC

TOPICS BEYOND SYLLABUS/ADVANCED TOPICS/DESIGN:

SINO:	**TOPIC**	**RELEVANCE TO PO**
1	Conservative fields in 3- space	1
2	Properties of curl and gradient	1

WEB SOURCE REFERENCES / ICT ENABLED TEACHING LEARNING RESOURCES:

1	http://www.math.com/
2	https://www.youtube.com/watch?v=Fh8m6ZdFaqU
3	https://www.youtube.com/watch?v=GmIcbqdvIgc
4	https://www.youtube.com/watch?v=2ZBcbFhrfOg
5	https://www.youtube.com/watch?v=o77UV7YrWvw
6	https://www.youtube.com/watch?v=Jd_t8jUJJfA
7	https://www.youtube.com/watch?v=2I4jKIGy238
8	https://www.youtube.com/watch?v=uliv9TzeD6o

DELIVERY/INSTRUCTIONAL METHODOLOGIES:

☑ ***CHALK & TALK***	☑ STUD. ASSIGNMENT	☑ WEB RESOURCES	☑LCD/SMART BOARDS
☐ ***STUD. SEMINARS***	☐ ADD-ON COURSES		

ASSESSMENT METHODOLOGIES-DIRECT

☑ ***ASSIGNMENTS***	☐ STUD. SEMINARS	☑ TESTS/MODEL EXAMS	☑ UNIV. EXAMINATION

☐ ***STUD. LAB PRACTICES***	☐ STUD. VIVA	☐ MINI/MAJOR PROJECTS	☐ CERTIFICATIONS
☐ ***ADD-ON COURSES***	☐ OTHERS		

ASSESSMENT METHODOLOGIES-INDIRECT

☑ ***ASSESSMENT OF COURSE OUTCOMES (BY FEEDBACK, ONCE)***	☑ STUDENT FEEDBACK ON FACULTY (TWICE)
☐ ***ASSESSMENT OF MINI/MAJOR PROJECTS BY EXT. EXPERTS***	☐ OTHERS

Prepared by **Approved by**

Menny M N **Dr. Ramkumar P.B. (HOD)**

101908/MA200A VECTOR CALCULUS, DIFFERENTIAL EQUATIONS AND TRANSFORMS

Course Contents and Lecture Schedule

No	Topic	No. of Lectures
1	**Module 1 : Calculus of vector functions (9 hours)**	
1.1	Vector valued function of a scalar variable - derivative of vector valued function of scalar variable t-geometrical meaning	2
1.2	Motion along a curve-speed , velocity, acceleration	1
1.3	Gradient and its properties, directional derivative , divergent and curl	3
1.4	Line integrals with respect to arc length, line integrals of vector fields. Work done as line integral	2
1.5	Conservative vector field, independence of path, potential function	1
2	**Module 2 : Vector integral theorems(9 hours)**	
2.1	Green's theorem and it's applications	2
2.2	Surface integrals , flux integral and their evaluation	3
2.3	Divergence theorem and applications	2
2.4	Stokes theorem and applications	2
3	**Module 3 : Ordinary Differential Equations (9 hours)**	
3.1	Homogenous linear equation of second order, Superposition principle, general solution	1
3.2	Homogenous linear ODEs of second order with constant coefficients	2
3.3	Second order Euler-Cauchy equation	1

3.4	Non homogenous linear differential equations of second order with constant coefficient-solution by undetermined coefficients, variation of parameters.	3
3.5	Higher order equations with constant coefficients	2
4	**Module 4 : Laplace Transform (10 hours)**	
4.1	Laplace Transform , inverse Transform, Linearity, First shifting theorem, transform of basic functions	2
4.2	Transform of derivatives and integrals	1
4.3	Solution of Differential equations, Initial value problems by Laplace transform method.	2
4.4	Unit step function --- Second shifting theorem	2
4.5	Dirac Delta function and solution of ODE involving Dirac delta function	2
4.6	Convolution and related problems.	1
5	**Module 5 : Fourier Transform (8 hours)**	
5.1	Fourier integral representation	1
5.2	Fourier Cosine and Sine integrals and transforms	2
5.3	Complex Fourier integral representation, Fourier transform and its inverse transforms, basic properties	3
5.4	Fourier transform of derivatives, Convolution theorem	2

MODULE 1 : CALCULUS OF VECTOR FUNCTIONS

TUTORIAL

1. a) If $\overrightarrow{r(t)} = (t+1)\hat{\imath} + (t^2-1)\hat{\jmath} + 2t\hat{k}$ is the position of a particle in space at time t, find the particle's velocity and acceleration vectors at $t = 1$.

   b) If $\overrightarrow{r(t)} = 2log(t+1)\hat{\imath} + t^2\hat{\jmath} + \frac{t^2}{2}\hat{k}$ is the position of a particle in space at time *t*, find the particle's velocity and acceleration vectors at *t=1*.

2. a) Find ∇f of the function $f(x,y,z) = x^2 + y^2 - 2z^2 + zlog\ x$ at $(1,1,1)$.

   b) Find the gradient of the function $f(x,y) = x - y$ at $(2,1)$.

   c) Find $grad\phi$ at the point $(1,-2,-1)$ when $\phi = 3x^2y - y^3z^2$.

3. a) In what direction from $(3,1,-2)$ is the directional derivative of $\phi = x^2y^2z^4$ maximum?

   b) Find the directions in which the function $f(x,y)$ increase and decrease most rapidly at P_0 . Also find the derivative of the function in these directions.

   i) $f(x,y) = x^3 + xy + y^2; P_0(-1,1)$ ii)) $f(x,y) = 20 - x^2 - y^2\ P_0(-1,3)$

   iii) $f(x,y) = \cos(3x-y)\,; P_0(\frac{\pi}{6},\frac{\pi}{4})$ iv)) $f(x,y,z) = \frac{x+z}{z-y}; P_0(5,7,6)$

4. Find the work done in moving particle in a force field given by $\vec{F} = 3xy\,\hat{\imath} - 5z\,\hat{\jmath} + 10\,x\hat{k}$ along the curve $x = t^2+1, y = 2t^2, z = t^3$ from t=0 to t=1.

5. a) Show that $\vec{F} = (y^2+2xz^2)\vec{i} + (2xy-z)\vec{j} + (2x^2z - y + 2z)\vec{k}$ is irrotational and hence find its scalar potential.

   b) If $\nabla\phi = (y^2 - 2xyz^3)\vec{i} + (3 + 2xy - x^2z^3)\vec{j} + (6z^3 - 3x^2yz^2)\vec{k}$, find ϕ .

   c) If $\nabla\phi = yz\vec{i} + xz\vec{j} + xz\vec{k}$, then find ϕ .

   d) Find the values of a, b, c so that $\vec{A} = (x+y+az)\vec{i} + (bx+2y-z)\vec{j} + (-x+cy+2z)\vec{k}$ is irrotational.

   e) If $\vec{V} = (x+3y)\vec{i} + (y-2z)\vec{j} + (x+\lambda z)\vec{k}$ is solenoidal, find λ .

   g) Find the divergence and curl of $\vec{F}(x,y,z) = yz\hat{\imath} + xy^2\hat{\jmath} + yz^2\hat{k}$

ASSIGNEMNT

1. a) Find the domain of and the value of $\overrightarrow{r(t_0)}$ $where$ $\overrightarrow{r(t)} = \sin 2t\hat{\imath} - 4t\hat{\jmath}; t_0 = \pi$

   b) If $\overrightarrow{r(t)} = (t+1)\hat{\imath} + \frac{t^2}{\sqrt{2}}\hat{\jmath} + \frac{t^3}{3}\hat{k}$ is the position of a particle in space at time t, find the particle's velocity and acceleration vectors at $t = 1$.

   c) If $\overrightarrow{r(t)} = 2cost\ \hat{\imath} + 3\ sint\ \hat{\jmath} + 4t\hat{k}$ is the position of a particle in space at time t, find the particle's velocity and acceleration vectors at $t = \frac{\pi}{2}$.

   d) Calculate $\frac{d}{dt}\left[\overrightarrow{r_1(t)}.\overrightarrow{r_2(t)}\right] where\ \overrightarrow{r_1(t)} = 2t\hat{\imath} + 3t^2\hat{\jmath} + t^3\hat{k}, \overrightarrow{r_2(t)} = t^4\hat{k}$

2. a) Find the derivative of $f(x,y) = xe^y + \cos(xy)$ at the point $(2,0)$ in the direction of $\vec{v} = 3\hat{\imath} - 4\hat{\jmath}$

   b) Find the directional derivative of $\phi = 2xy + z^2$ at the point (1,-1,3) in the direction of $\vec{i} + 2\vec{j} + 2\vec{k}$.

   c) Find $D_u f$ at P where i) $f(x,y) = e^{2xy}; P(5,0); \hat{u} = -\frac{3}{5}\hat{\imath} + \frac{4}{5}\hat{\jmath}$

   ii) $f(x,y,z) = ye^{xz} + z^3; P(0,2,3); \hat{u} = \frac{2}{7}\hat{\imath} - \frac{3}{7}\hat{\jmath} + \frac{6}{7}\hat{k}$

3. a) If $\nabla\phi$ is solenoidal , then find $\nabla^2\phi$.

   b) Find a unit normal vector to the surface $x^2 + y^2 - 2z + 3 = 0$ at $(1,2,-1)$

4. What is the greatest rate of increase of $\phi = xyz^2$ at (1, 0, 3)?

5. a) Find the angle between the surfaces $x^2+y^2+z^2 = 9 \,\&\, z = x^2+y^2-3$ at $(2,-1,2)$

   b) $div\ \vec{F}\ and\ Curl\ \vec{F}$ of i) $\vec{F}(x,y,z) = x^2\hat{\imath} - 3\hat{\jmath} + yz^2\hat{k}$ ii) $\vec{F}(x,y,z) = 7y^3z^2\hat{\imath} - 8x^2z^2\hat{\jmath} - 4xy^4\hat{k}$

6. If $\vec{F} = 5xy\vec{i} + 2y\,\vec{j}$, evaluate $\int_C \vec{F}\cdot d\vec{r}$,where C is the curve $y = x^3$ between x=1 and x=2.

7. Find the work done in moving a particle in the force field $\vec{F} = 3x^2\hat{\imath} + (2xz - y)\hat{\jmath} + z\hat{k}$ along the straight line from (0,0,0) to (1,1,1)

8. Find the angle between the normals to the surface $xy^3z^2 = 4$ at the points (-1,-1,2) and (4,1,-1).

9. Evaluate $\int_C \vec{F}\cdot d\vec{r}$ where $\vec{F} = 2y\vec{i} + 3x\vec{j}$ and C is the circle $x^2+y^2 = 4$.

10. Find the work done when a force $\vec{F} = (x^2 - y^2 + x)\vec{i} - (2xy + y)\vec{j}$ moves a particle in the xy-plane from $(0,0)$ to $(1,1)$ along the curve $y^2 = x$.

UNITWISE QUESTION BANK

1. a) If $\overrightarrow{r(t)} = \sec t\ \hat{i} + tant\ \hat{j} + \frac{4}{3}t\hat{k}$ is the position of a particle in space at time t, find the particle's velocity and acceleration vectors at $t = \frac{\pi}{6}$.

   b) If $\overrightarrow{r(t)} = (t - sint\ )\hat{i} + (1 - \cos t)\hat{j}\ ; 0 \le t \le 2\pi$ is the position vector of a particle in space at time t. Find the time or times in the given time interval when the velocity and acceleration vectors are orthogonal.

2. Show that $\overrightarrow{r(t)} = sint\ \hat{i} + \cos t\ \hat{j} + \sqrt{3}\hat{k}$ has constant length and is orthogonal to its derivative.

3. If $\bar{r}$ is a differentiable vector function of $t$of constant length, then prove that $\bar{r}.\frac{d\bar{r}}{dt} = 0$.

4. Find the angle between the velocity and acceleration vectors at time $t = 0$, if the position of the particle in space at time t, $\overrightarrow{r(t)} = \frac{\sqrt{2}}{2}t\hat{i} + \left(\frac{\sqrt{2}}{2}t - 16t^2\right)\hat{j}$.

5. Find the directional derivative of $xy^2 + yz^3$ at (2,-1,1) in the direction of the normal to the surface $x\log z - y^2 + 4 = 0$ at $(-1,2,1)$.

6. If $\vec{F} = 3x^2\vec{i} + 5xy^2\vec{j} + xyz^3\vec{k}$, find $\nabla\cdot\vec{F}, \nabla(\nabla\cdot\vec{F}), \nabla\times\vec{F}, \nabla\cdot(\nabla\times\vec{F}), \nabla\times(\nabla\times\vec{F})$ at $(1,2,3)$.

7. f $\vec{r} = x\vec{i} + y\vec{j} + z\vec{k}$, then prove that $r^n\vec{r}$ is solenoidal only when $n = -3$ but irrotational for all values of n.

8. Determine whether the line integral of $\vec{F} = (4xy - 3x^2z^2)\vec{i} + 2x^2\ \vec{j} - 2x^3z\vec{k}$ is independent of the path C.

9. Find the work done in moving a particle in the force field by $\vec{F} = 3x^2\ \hat{i} + (2xz - y)\ \hat{j} + z\hat{k}$ along the path $x = t, y = t^2, z = t^3$.

10. If $\vec{F} = (x^2 - y^2)\hat{i} + 2xy\ \hat{j}$, evaluate $\int_C \vec{F}.dr$ where C is bounded by the coordinate axes and the lines $x = a, y = b$.

11. If $\vec{r}$ is the position vector of the point P(x ,y, z) and $r = |\vec{r}|$, prove that

    (i) $\nabla r^n = nr^{n-2}\vec{r}$ and hence deduce that $grad(1/r) = -\vec{r}/r^3$

    (ii) $div(grad(r^n)) = n(n+1)r^{n-2}$ and hence deduce that $div(grad(1/r)) = 0$

    (iii) $div(r^n\vec{r}) = (n+3)r^n$ and $curl(r^n\vec{r}) = 0$

12. Show that $\vec{F} = (2xy + z^3)\vec{i} + x^2\vec{j} + 3xz^2\vec{k}$ is a conservative vector field. Find its scalar potential.

13. Prove that $\vec{F} = (2xy + z^3)\vec{i} + x^2\vec{j} + 3xz^2\vec{k}$ is a conservative force field.

14. Find a & b such that the surfaces $ax^2 - byz = (a+2)x$ and $4x^2y + z^3 = 4$ cut orthogonally at (1,-1, 2).

15. Find $\int_C \vec{F}\cdot d\vec{r}$ where $\vec{F} = (2y+3)\vec{i} + xz\vec{j} + (yz - x)\vec{k}$ along the line joining $(0,0,0)$ & $(2,1,1)$

MODULE II : VECTOR INTEGRAL THEOREMS

TUTORIAL

1. Use divergence theorem to evaluate $\iint_S \vec{F}.\vec{dS}$, where $\vec{F} = x^3 i + y^3 j + z^3 k$ and S is the surface of the sphere $x^2 + y^2 + z^2 = a^2$.
2. Verify Green's theorem in the xy plane $\int_C (xy^2 - 2xy)dx + (x^2 y + 3)dy$ around the boundary C of the region enclosed by $y^2 = 8x$ and $x = 2$.
3. Verify Stock's theorem for the function $\vec{F} = x^2 i + xyj$ integrated round the square whose sides are $x = 0, x = a, y = 0, y = a$ in the plane $z = 0$.
4. Using divergence theorem to find the flux of $F = z^3 i - x^3 j + y^3 k$ across σ where σ is the sphere $x^2 + y^2 + z^2 = a^2$.
5. Apply Green's theorem to prove that area enclosed by a plane curve is $\frac{1}{2}\int_C xdy - ydx$.

ASSIGNMENT

6. Use Stock's theorem to evaluate $\iint_S (\nabla \times \vec{F}).\hat{n}dS$ where $\vec{F} = yi + (x - 2xz)j - xyk$ and S is the surface of the sphere $x^2 + y^2 + z^2 = a^2$.
7. Derive the relation between Green's theorem and Stoke's theorem
8. What is the outward flux of $F = xi + yj + zk$ across any unit cube
9. Evaluate $\iint_S (\nabla \times \vec{F}).\hat{n}dS$ where $\vec{F} = (x^2 + y - 4)i + 3xyj + (2xz + z^2)k$ and S is the sphere $x^2 + y^2 + z^2 = 16$ above xy plane.
10. Verify divergence theorem for $\vec{F} = (x^3 - yz)i - 2x^2 yj + 2k$ taken over the cube bounded by $x = 0, x = a, y = 0, y = a, z = 0, z = a$.
11. Find the circulation of $\vec{F}$ round the curve C, where $\vec{F} = yi + zj + xk$ and C is the circle $x^2 + y^2 = 1$ and $z = 0$.
12. Show that $\iint_S \vec{F}.\hat{n}ds = 3/2$ where $\vec{F} = 4xzi - y^2 j + yzk$ and S is the cube bounded by the planes $x = 0, x = 1, y = 0, y = 1, z = 0, z = 1$
13. Evaluate $\iiint_v \phi dV$ where $\phi = 45x^2 y$ and V is the closed region bounded by the planes $4x + 2yz = 8, x = 0, y = 0, z = 0$.
14. Evaluate $\iint_S \vec{A}.\hat{n}ds$ where $\vec{A} = 12x^2 yi - 3yzj + 2zk$ and S is the portion of the plane $x + y + z = 1$ included in the first octant.

15. Evaluate $\iint_S \vec{A}.\hat{n}ds$ where $\vec{A} = 18zi - 12j + 3yk$ and S is the surface of the plane $2x + 3y + 6z = 12$ in the first octant.

UNITWISE QUESTION BANK

16. Evaluate the surface integral $\iint_\sigma z^2 dS$ where σ is the portion of the cone $z = \sqrt{x^2 + y^2}$ between the planes $z = 1$ and $z = 2$.
17. Find the flux of vector field $F = xi + yj + 2zk$ across σ where σ is the portion of the surface $z = 4 - x^2 - y^2$ above the xy plane oriented by upward normal.
18. Find the flux of vector field $F = (x + y)i + (y + z)j + (z + x)k$ across σ where σ is the portion of the plane $x + y + z = 2$ in the first octant , oriented by unit normals with positive components.
19. Find the flux of vector field $F = xk$ across σ where σ is the portion of the paraboloid $z = x^2 + y^2$ below the plane $z = 2y$, oriented by downward unit normals .
20. Using divergence theorem to find the flux of $F = (x^2 + y)i + z^2 j + (e^y - z)k$ across the surface σ where σ is the surface of the rectangular solid bounded by the coordinate planes and the planes $x = 3, y = 1, z = 3$.
21. Verify stock's theorem to evaluate $\vec{F} = yi + zj + xk$ where S is the upper half of the sphere $x^2 + y^2 + z^2 = 1$ and C is its boundary.
22. Using divergence theorem to find the flux of $F = (x^2 + y)i + xyj - (2xz + y)k$ across the surface σ where σ is the surface of the tetrahedron in the first octant bounded by $x + y + z = 2$ and the coordinate planes.
23. Find the work performed by the force field $F = (z - 2y)i + (y - z)j + (z - x)k$ on a particle that traverse the circle $x^2 + y^2 = a^2$ in the xy plane with counter clock wise orientation looking down the positive z axis using stoke's theorem.
24. Evaluate by Green's theorem $\oint_C e^{-x}(\sin ydx + \cos ydy)$ where C is the rectangle with vertices $(0,0), (\pi,0), (\pi, \frac{\pi}{2}), (0, \frac{\pi}{2})$.
25. Verify divergence theorem for $\vec{F} = x^2 i + zj + zyk$ taken over the cube bounded by $x = 0, x = 1, y = 0, y = 1, z = 0, z = 1$.
26. State Green's theorem to express the area of a plane region bounded by a curve as a line integral.
27. State Divergence theorem including all the required hypothesis and write the application.
28. Use a line integral to find the area of the region enclosed by the astroid $x = a\cos^3\phi$, $y = a\sin^3\phi$, $0 \le \phi \le 2\pi$.
29. Let σ be the surface of the cube bounded by the planes $x = \pm 1, y = \pm 1, z = \pm 1$, oriented by the outward unit normals . Fin the flux of F across σ where (a) $F = x^2 i + y^2 j + z^2 k$ (b) $F = xi + yj + zk$.

30. Consider the vector field given by the formula $F = (x - z)i + (y - x)j + (z - xy)k$ .Using stoke's theorem find the circulation around the triangle with vertices $A(1,0,0)$, $B(0,2,0)$ and $C(0,0,1)$ oriented counter clockwise looking form origin towards the first octant.

MODULE III ORDINARY DIFFERENTIAL EQUATIONS
TUTORIAL QUESTIONS

1. Reduce to first order and solve the following differential equations.
   (i) $xy'' + 2y' + xy = 0, y_1 = x^2$
   (ii) $xy'' + 2y' + xy = 0, y_1 = \frac{cosx}{x}$
2. (a)Verify that the given functions are linearly independent and form a basis of solutions of the given ODE. (b) Solve the IVP.
   (i) $y'' + 2y' + y = 0, y(0) = 2, y'(0) = -1, e^{-x}, xe^{-x}$
   (ii) $x^2y'' - xy' + y = 0, y(1) = 1, y'(1) = 2,\ x; \ln(x)$.
3. Solve the following ODE.
   (i) $y''' - 6y'' + 11y' - 6y = 0$
   (ii) $y^{IV} - y = 0$
   (iii) $y^{IV} + 6y''' + 9y'' = 0$
4. Solve the following initial value problems.
   (i)$y'' - 3y' + 2y = 0;\quad y(0) = y'(0) = 1.$

   (ii) $y'' + 0.2y' + 4.01y = 0;\quad y(0) = 0,\ y'(0) = 2.$

   (iii) $y'' - k^2y = 0\ (k \neq 0);\quad y(0) = 1, y'(0) = 1.$

5. Find the Wronskian of the following.
   (i) $2x, \frac{1}{4x}$. (ii) $e^{-x}\cos\omega x\,, e^{-x}\sin\omega x$. (iii) $x^k\cos(lnx), x^k\sin(lnx)$.

ASSIGNMENT

1. Find a second order homogeneous linear ODE for which the given functions are solutions. (b) Show linear independence by the Wronskian. (c) Solve the initial value problem.
   (i)$\cos 5x, \sin 5x, y(0) = 3, y'(0) = -5.$
   (ii) $x^2, x^2\ln x;\quad y(1) = 4, y'(1) = 6.$
2. Find the second solution of the given differential equation given y_1. Also find the general solution.
   (i) $x^2y'' + xy' - y = 0\ ;\ y_1 = x + \frac{1}{x}$.
   (ii)$xy'' - (2x-1)y' + (x-1)y = 0;\ y_1 = e^x$.
3. Find a basis of solutions of the ODE$(x^2 - x)y'' - xy' + y = 0$ by reducing to first order.
4. Solve the following differential equation:

   (a) $y''' + y = \sin 3x - \cos^2\frac{x}{2}$
   (b) $y''' - 3y'' + 4y = 2\sinh 2t$
   (c) $y''' - 3y'' + 3y' - y = 0$

Solve the following differential equations by method of variation of parameter

5. $y'' + y = \cos x$
6. $y'' - 4y' + 4y = 6 + \frac{e^{2x}}{x}$

Solve the following differential equations

7. $x^2y'' + 2xy' - 20y = (1+x)^2$
8. $x^2y'' + xy' + y = 4\log x \sin(\log x)$
9. $(3x+2)^2y'' + 3(3x+2)y' - 36y = 3x^2 + 4x + 1$
10. $(1+x)^2y'' + (1+x)y' + y = 4\cos\log(1+x)$

UNITWISE QUESTION BANK

1. Does the function $y = C_1 \cos x + C_2 \sin x$ form a solution of $y'' + y = 0$? Is it the general solution? Justify your answer.
2. Solve $y'' + 4y' + 4y = x^2 + e^{-x}\cos x$.
3. Solve$y''' - 3y'' + 3y' - y = e^x - x - 1$.
4. Solve $y''' + 3y'' + 3y' + y = 30e^{-x}$ given $y(0) = 3, y'(0) = -3, y''(0) = -47$
5. Solve $(D^2 - 4D + 4)y = 8x^2e^{2x}\sin 2x$.
6. Solve $x^2y'' - 3xy' + y = \ln x\left[\frac{\sin(\ln x)+1}{x}\right]$
7. Solve $x^2y'' - 2xy' - 4y = x^4$.
8. Use method of variation of parameters to solve the following differential equation $\frac{d^2y}{dx^2} - y = \frac{2}{1+e^x}$.
9. $(D^2 - 1)y = 2(1 - e^{-2x})^{-1/2}$.
10. $y'' + y = \sec x \tan x$.
11. Solve $\frac{d^2y}{dx^2} - 2\frac{dy}{dx} + y = xe^x \sin x$.
12. What is the superposition or linearity principle? For what nth order ODE's does it hold?
13. Solve$x^2y''' + 3xy'' - 2y' = 0$.
14. Solve $8x^3y''' + 10x^2y'' + xy' - y = 5$.
15. Solve the IVP $(D^3 + 3D^2 + 3D + 1)y = 8\sin x, y(0) = -1, y'(0) = -3, y''(0) = 5$.

MODULE 4: LAPLACE TRANSFORMS
TUTORIAL

1. Find the Laplace transform of the following functions:
   i) $f(t) = sinat.sinbt$ ii) f(t) = $\boldsymbol{e^{-2t}}\cos 4t$ iii) $f(t) = sin^2 3t$ iv) $f(t) = t^3 e^{-2t}$
   v) $f(t) = t^2$ vi) $(a - bt)^2$
2. Find the Laplace transform of i) $\frac{e^{-at} - e^{-bt}}{t}$ ii) $tcos4t$
3. Find the Laplace transform of i) $t^2 + te^t + \frac{1}{t}\sin 2t$ ii) $t - 3, t > 3$ iii) $t^2, 1 < t < 2$
   iv) $\sin ht, 0 < t < 2$ v) $\sin \pi t, (2 < t < 4)$
4. Find the Laplace transform of $tf(t)$, where $f(t) = e^{2t} + sin^2 t$
5. Find the Inverse Laplace transform of i) $\frac{s+2}{s^2-4s+13}$ ii) $\frac{s+1}{s^2+2s}$ iii) $\frac{e^{-2s}}{(s-1)^3}$

ASSIGNMENT

1. Find the Laplace transform of i) $f(t) = coshatsinat$ ii) $\cos(\omega t + \theta)$
2. Find the Laplace transform of i) $f(t) = \frac{\cos at - \cos bt}{t}$ ii) $ke^{-at}\cos \omega t$
3. Find the Laplace transform of i) $f(t) = cos^2 2t$ ii) $f(t) = t^2 e^{-3t}\sin 2t$
4. Find the Laplace transform of i) $f(t) = te^{at}\sin bt$ ii) $e^{-t}sinh4t$
4. In an electric circuit with emf $E(t)$, resistance R and inductance L,the current i builds up at the rate given by $L\frac{di}{dt} + iR = E(t)$. If the switch is connected at $t = 0$ and disconnected at $t = a$, then find the current i at any instant.
5. Find the Laplace transform of i) $f(t) = \frac{1-e^t}{t}$ ii) $f(t) = t^2 \sin at$ iii) $\cos 2t, (0 < t < \pi)$
6. Find the Inverse Laplace transform of i) $\frac{s+2}{s^2(s+1)(s+3)}$ ii) $\frac{4s+12}{s^2+8s+16}$
7. Find the Inverse Laplace transform of i) $\frac{2s+3}{(s^2+2s+5)(s-1)}$ ii) $\frac{4}{s^2-2s-3}$ iii) $\frac{e^{-2s}}{s^6}$
   iv) $\frac{2(e^{-s}-e^{-3s})}{(s^2-4)}$
8. Solve the differential equations $(D^2 + \omega^2)x = \cos \omega t, t \geq 0, x(0) = 0, x'(0) = 0.$
9. Solve the differential equations i) $y'' - 3y' + 2y = 4t + e^{3t}; y(0) = 1, y'(0) = -1.$
   ii) $y'' + 10y' + 24y = 144t^2; y(0) = \frac{19}{12}, y'(0) = -5.$
   iii) $y'' + 4y = \delta(t - \pi) - \delta(t - 2\pi), y(0) = 1, y'(0) = 1$
10. Apply convolution theorem to evaluate $L^{-1}(\frac{s}{(s^2+a^2)^2})$

UNITWISE QUESTION BANK

1. Find the Laplace transform of i) $f(t) = cos2\pi t$ ii) $f(t) = 2t + 8$
2. Find the Laplace transform of i) $f(t) = 1.5\sin\left(3t - \frac{\pi}{2}\right)$ ii) $cos^2 \omega t$
3. Find the Laplace transform of i) $f(t) = sin^2 2t$ ii) $f(t) = te^{-4t}\cos 2t$
4. Find the Laplace transform of i) $f(t) = te^{5t}\sin 7t$ ii) $e^{-3t}sinh6t$
5. Find the Inverse Laplace transform of i) $\frac{5s+1}{s^2-25}$ ii) $\frac{s}{L^2 s^2 + \frac{1}{4}\pi^2}$ iii) $log\frac{s+1}{s-1}$

6. Find the Inverse Laplace transform of i) $\frac{-s+11}{s^2-2s-3}$ ii) $\frac{1}{(s+\sqrt{2})(s-\sqrt{3})}$

7. Find the Inverse Laplace transform of i) $\frac{90}{(s+\sqrt{3})^6}$ ii) $\frac{6s+7}{2s^2+4s+10}$

8. Find the Inverse Laplace transform of i) $\frac{k_0}{s}+\frac{k_1}{(s-a)^2}$ ii) $\frac{a(s+k)+b\pi}{(s+k)^2+\pi^2}$

9. Solve the differential equations i) $y''+y'-6y=0; y(0)=1, y'(0)=1.$
   ii) $y''+9y=10e^{-t}; y(0)=0, y'(0)=0.$

10. Solve the differential equations i) $y''-3y'+2y=4t-8; y(0)=0, y'(0)=3.$
   ii) $y'-6y=0\,; y(-1)=4.$
   iii) $y''+4y'+5y=\delta(t-1); y(0)=2, y'(0)=7.$

11. Find the Inverse Laplace transform of i) $\frac{2}{s^2+\frac{s}{3}}$ ii) $\frac{1}{s(s^2+\frac{\omega^2}{4})}$

12. Find the Inverse Laplace transform of i) $\frac{1}{s^3+as^2}$ ii) $\frac{3s+4}{s^4+k^2s^2}$

13. Find the Inverse Laplace transform of $\frac{4(1-e^{-\pi s})}{s^3+4}$

14. Apply convolution theorem to evaluate $L^{-1}(\frac{9}{s(s+3)})$

15. Apply convolution theorem to evaluate $L^{-1}(\frac{e^{-as}}{s(s-2)})$

Module-5 : Fourier Transform
Tutorial

1. Use Fourier integral to show that

$$\int_0^\infty \frac{\cos(xw) + w\sin(xw)}{1+w^2}dw = \begin{cases} 0 & \text{if } x < 0 \\ \pi/2 & \text{if } x = 0 \\ \pi e^{-x} & \text{if } x > 0 \end{cases}$$

2. Using Fourier sine integral for $f(x) = e^{-ax}$, show that

$$\int_0^\infty \frac{\lambda \sin(\lambda x)}{\lambda^2 + a^2}d\lambda = \pi e^{-ax}$$

3. Find the Fourier sine transform of $e^{-x}, x > 0$. Hence evaluate $\displaystyle\int_0^\infty \frac{x\sin x}{1+x^2}dx$.

4. Solve the integral equation $\displaystyle\int_0^\infty f(x)\sin(sx)dx = e^{-s}$.

5. Find the Fourier transform of

$$f(x) = \begin{cases} 1 - |x| & \text{if } |x| \leq 1 \\ 0 & \text{if } |x| > 1 \end{cases}$$

and also find the inverse Fourier transform.

Assignment

1. Using Fourier integral representation, show that

$$\int_0^\infty \frac{\sin(w) - w\cos(w)}{w^2}\sin(xw)dw = \begin{cases} \frac{\pi}{2}x & \text{if } 0 < x < 1 \\ \pi/4 & \text{if } x = 1 \\ 0 & \text{if } x > 1 \end{cases}$$

2. Using Fourier integral, prove that

$$\int_0^\infty \frac{\sin(\pi\lambda)\sin(x\lambda)}{1-\lambda^2} = \begin{cases} \frac{\pi}{2}\sin x & \text{if } 0 \leq x \leq \pi \\ 0 & \text{if } x \geq \pi \end{cases}$$

3. Using Fourier cosine integral, show that

$$\int_0^\infty \frac{\cos xw}{1+w^2}dw = \frac{\pi}{2}e^{-x} \text{ if } x > 0$$

4. Represent

$$f(x) = \begin{cases} x^2 & \text{if } 0 < x < 1 \\ 0 & \text{if } x > 1 \end{cases}$$

as a Fourier cosine integral.

5. Find the Fourier sine transform of

$$f(x) = \begin{cases} \sin x & \text{if } 0 < x < \pi \\ 0 & \text{if } x > \pi \end{cases}$$

6. Find the Fourier cosine transform of $f(x) = \sin x, 0 < x < \pi$

7. Solve the integral equation

$$\int_0^\infty f(x)\cos(px)dx = \begin{cases} 1-p & 0 \le p \le 1 \\ 0 & p > 1 \end{cases}$$

Hence deduce that $\displaystyle\int_0^\infty \frac{\sin^2 t}{t^2}dt = \frac{\pi}{2}$.

8. Find $f(x)$ from

$$\int_0^\infty f(x)\sin(xt)dt = \begin{cases} 1 & 0 \le t < 1 \\ 2 & 1 \le t < 2 \\ 0 & t \ge 2 \end{cases}$$

9. Find the Fourier transform of

$$f(x) = \begin{cases} e^{kx} & \text{if } x < 0 \\ 0 & \text{if } x > 0 \end{cases}$$

when $k > 0$.

10. Find the Fourier transform of

$$f(x) = \begin{cases} xe^{-x} & \text{if } -1 < x < 0 \\ 0 & \text{otherwise} \end{cases}$$

.

Unitwise Question Bank

1. Find the Fourier integral representation of

$$f(x) = \begin{cases} 1 & \text{if } |x| < 1 \\ 0 & \text{if } |x| > 1 \end{cases}$$

2. Show that the integral represents the indicated function

$$\int_0^\infty \frac{w^3 \sin xw}{w^4+4}dw = \frac{1}{2}\pi e^{-x}\cos x \text{ if } x > 0$$

3. Show that

$$\int_0^\infty \frac{\cos(\frac{\pi}{2}w)\cos(xw)}{1-w^2}dw = \begin{cases} \frac{\pi}{2}\cos x & \text{if } 0 < |x| < \frac{\pi}{2} \\ 0 & \text{if } |x| > \frac{\pi}{2} \end{cases}$$

4. Express

$$f(x) = \begin{cases} 1 & \text{if } 0 < x < \pi \\ 0 & \text{if } x > \pi \end{cases}$$

as a Fourier sine integral. Hence evaluate $\displaystyle\int_0^\infty \frac{1-\cos(\pi w)}{w}\sin(xw)dw$.

5. Represent the following function as a Fourier cosine integral.

$$f(x) = \begin{cases} a^2 - x^2 & \text{if } 0 < x < a \\ 0 & \text{if } x > a \end{cases}$$

6. Represent $f(x)$ as a Fourier sine integral.

$$f(x) = \begin{cases} e^x & \text{if } 0 < x < 1 \\ 0 & \text{if } x > 1 \end{cases}$$

7. Find the Fourier cosine transform of $2e^{-2x} + 3e^{-4x}$.

8. Find $f(x)$, if its sine transform is $\dfrac{e^{-as}}{s}$. Hence deduce the inverse sine transform of $\dfrac{1}{s}$.

9. Find the Fourier cosine transform of

$$f(x) = \begin{cases} 3 & \text{if } 0 \leq x \leq 2 \\ 1 & \text{if } x > 2 \end{cases}$$

10. Find $f(x)$ from

$$\int_0^\infty f(x)\cos(xt)dt = \begin{cases} 2 & 0 \leq t < 1 \\ 3 & 1 \leq t < 2 \\ 0 & t \geq 2 \end{cases}$$

11. Find the Fourier transform of

$$f(x) = \begin{cases} 1 & \text{if } |x| < a \\ 0 & \text{if } |x| > a \end{cases}$$

12. Find the Fourier transform of

$$f(x) = \begin{cases} |x| & \text{if } -1 < x < 1 \\ 0 & \text{otherwise} \end{cases}$$

13. Find the Fourier transform of

$$f(x) = \begin{cases} 1 & \text{if } a < x < b \\ 0 & \text{otherwise} \end{cases}$$

14. Find the Fourier transform of

$$f(x) = \begin{cases} -1 & -1 < x < 0 \\ 1 & 0 < x < 1 \\ 0 & \text{otherwise} \end{cases}$$

15. Find the Fourier transform of

$$f(x) = \begin{cases} e^{2ix} & -1 < x < 1 \\ 0 & \text{otherwise} \end{cases}$$

101906/PH900B
ENGINEERING PHYSICS

101906/PH900B	ENGINEERING PHYSICS A (FOR CIRCUIT BRANCHES)	CATEGORY	L	T	P	CREDIT	YEAR OF INTRODUCTION
		BSC	4	0	0	4	2021

COURSE INFORMATION SHEET- ENGINEERING PHYSICS

PROGRAMME: ENGINEERING	**DEGREE: BTECH**
COURSE: ENGINEERING PHYSICS	**SEMESTER: 1 AND 2 CREDITS: 4**
COURSE CODE: 101906/PH900B **REGULATION: 2021**	**COURSE TYPE: CORE**
COURSE AREA/DOMAIN: Engineering Physics	**CONTACT HOURS: 4 (L) hours/Week.**
CORRESPONDING LAB COURSE CODE : 101908/PH922S	**LAB COURSE NAME: Engineering Physics Lab**

Preamble:

The aim of the Engineering Physics Program is to offer students a solid background in the fundamental concepts of physicsat the foundation of the respective engineering disciplines. The program is designed to develop scientific attitudes in the students and equip them with appropriate engineering professional skillsspecified as global program outcomes of engineering education to make them future-ready.

Prerequisite:

Higher secondary level Physics, Mathematical course on vector calculus, differential equations and linear algebra

Course Contents and Lecture Schedule

No	Topic	No. of Lectures
1	**Oscillations and Waves (9 hours)**	
1.1	Harmonic oscillations, Damped harmonic motion-Derivation of differential equation and its solution, Over damped, Critically damped and Under damped Cases, Quality factor-Expression	2 hrs
1.2	Forced oscillations-Differential Equation-Derivation of expressions for amplitude and phase of forced oscillations, Amplitude Resonance- Expression for Resonant frequency, Quality factor and Sharpness of Resonance, Electrical analogy of mechanical oscillators	3hrs
1.3	Wave motion- Derivation of one dimensional wave equation and its solution, Three dimensional wave equation and its solution (no derivation)	2 hrs
1.4	Distinction between transverse and longitudinal waves. Transverse vibration in a stretched string, Statement of laws of vibration	2 hrs
2	**Wave Optics (9 hours)**	
2.1	Interference of light-Principle of superposition of waves, Theory of thin films - Cosine law (Reflected system), Derivation of the conditions of constructive and destructive Interference	2 hrs

2.2	Interference due to wedge shaped films -Determination of thickness and test for optical planeness, Newton's rings - Measurement of wavelength and refractive index, Antireflection coatings	4 hr
2.3	Diffraction of light, Fresnel and Fraunhofer classes of diffraction, Diffraction grating-Grating equation	2 hrs
2.4	Rayleigh criterion for limit of resolution, Resolving and Dispersive power of a grating with expression (no derivation)	1 hr
3	**Quantum Mechanics &Nanotechnology (9hours)**	
3.1	Introduction for the need of Quantum mechanics, Wave nature of Particles, Uncertainty principle, Applications-Absence of electrons inside a nucleus and Natural line broadening mechanism	2 hrs
3.2	Formulation of time dependent and independent Schrodinger wave equations- Physical Meaning of wave function, Particle in a one dimensional box- Derivation for normalised wave function and energyeigen values, Quantum Mechanical Tunnelling (Qualitative)	4 hrs
3.3	Introduction to nanoscience and technology, Increase in surface to volume ratio for nanomaterials, Quantum confinement in one dimension, two dimension and three dimension-Nano sheets, Nanowires and Quantum dots	2 hrs
3.4	Properties of nanomaterials-mechanical, electrical and optical Applications of nanotechnology (qualitative ideas)	1 hr
4	**Magnetism, Electromagnetic Theory & Basics of Solid State Physics(9 hours)**	
4.1	Gauss's law for Magnetic flux density, Ampere's Circuital law, Faraday's law in terms of EMF produced by changing magnetic flux.	2 hrs
4.2	Classification of magnetic materials- para, dia and ferromagnetic materials, Magnetic devices	1 hr
4.3	Gauss divergence theorem & Stokes' theorem, Equation of continuity	1hrs
4.4	Derivation of Maxwell's equations in vacuum, Electromagnetic waves, Velocity of Electromagnetic waves in free space	2hrs
4.5	Band theory of solids, Semiconductors, Fermi Dirac distribution, Fermi level and Fermi energy,	1 hrs
4.6	Bloch theorem, phonons, dispersion relations and phonon modes (Qualitative). Solid state nano devices	2 hrs
4.7	Magnetic field and Magnetic flux density, Gauss's law for Magnetic flux density, Ampere's Circuital law, Faraday's law in terms of EMF produced by changing magnetic flux Explanation for Magnetic permeability and susceptibility Classification of magnetic materials- para, dia and ferromagnetic materials	3 hrs
4.8	Fundamentals of vector calculus, concept of divergence, gradient and curl along with physical significance, Line, Surface and Volume integrals, Gauss divergence theorem & Stokes' theorem Equation of continuity, Derivation of Maxwell's equations in vacuum, Comparison of displacement current with conduction current. Electromagnetic waves, Velocity of Electromagnetic waves in free space, Flow of energy and Poynting's vector (no derivation)	4 hrs
5	**Superconductivity &Photonics (9hours)**	

5.1	Super conducting Phenomena, Meissner effect and perfect diamagnetism, Types of superconductors-Type I and Type II	2 hrs
5.2	BCS Theory (Qualitative), High temperature superconductors, Applications of super conductivity	2 hrs
5.3	Introduction to photonics-Photonic devices-Light Emitting Diode, Photo detectors -Junction and PIN photodiodes, Solar cells-I-V Characteristics	2 hrs
5.4	Optic fibre-Principle of propagation of light, Types of fibres-Step index and Graded index fibres, Numerical aperture –Derivation, Fibre optic communication system (block diagram), Industrial, Medical and Technological applications of optical fibre, Fibre optic sensors-Intensity Modulated and Phase modulated sensors	3 hrs
		TOTAL **45 hrs**

Text Books

1. M.N.Avadhanulu, P.G.Kshirsagar,TVS Arun Murthy “A Text book of Engineering Physics”, S.Chand&Co., Revised Edition 2019
2. H.K.Malik , A.K. Singh, “Engineering Physics” McGraw Hill Education, Second Edition 2017
3. David J Griffiths, “Introduction to Electrodynamics’’, Addison-Wesley publishing, 3rd Edition, 1999
4. Neil Ashcroft and N. David Mermin, “Solid State Physics”, 1st Edition, Cengage, 2003.
5. Hofmann, Philip, “Solid state physics: an introduction”, Wiley, 2008.
6. Kittel, C., “Introduction to solid state physics”, 7th Edition, John Wiley & Sons, 2004
7. Arthur Beiser, “Concepts of Modern Physics ", Tata McGraw Hill Publications, 6th Edition, 2003

Reference Books

1. Arthur Beiser, “Concepts of Modern Physics ", Tata McGraw Hill Publications, 6th Edition 2003
2. D.K. Bhattacharya, PoonamTandon, “Engineering Physics”, Oxford University Press, 2015
3. Md.N.Khan&S.Panigrahi “Principles of Engineering Physics 1&2”, Cambridge University Press, 2016
4. Aruldhas G., “Engineering Physics”, PHI Pvt. Ltd., 2015
5. AjoyGhatak, “Optics”, Mc Graw Hill Education, Sixth Edition, 2017
6. T. Pradeep, “Nano:The Essentials’’, McGraw Hill India Ltd, 2007
7. Halliday, Resnick, Walker, “Fundamentals of Physics’’, John Wiley &Sons.Inc, 2001

8. David J Griffiths, “Introduction to Electrodynamics’’, Addison-Wesley publishing, 3rd Edition, 1999

9. Premlet B., “Advanced Engineering Physics”, Phasor Books,10th edition,2017

10. I. Dominic and. A. Nahari, “A Text Book of Engineering physics”, Owl Books Publishers, Revised edition, 2016

11. Neeraj Mehta, “Applied Physics for Engineers”, PHI Learing Pvt Ltd., 2014.

12. Dilip K. Roy, “Physics of Semiconductor Devices”, Univ. Press (India) Pvt. Ltd., 1992.

13. Aruldhas G., “Engineering Physics”, PHI Pvt. Ltd., 2015

14. S. O. Pillai, “Solid State Physics”, 4th edition, New Age International (p) Ltd, 2008

15. Gupta, Kumar, “Solid State Physics”, K. Nath& Co., 2018

Course Outcomes: After the completion of the course the student will be able to

CO 1	Compute the quantitative aspects of waves and oscillations in engineering systems. Identify appropriate seed idea for entrepreneurial realization.
CO 2	Apply the interaction of light with matter through interference, diffraction and identify these phenomena in different natural optical processes and optical instruments. Identify appropriate seed idea for entrepreneurial realization.
CO 3	Analyze the behaviour of matter in the atomic and subatomic level through the principles of quantum mechanics to perceive the microscopic processes in electronic devices. Identify appropriate seed idea for entrepreneurial realization.
CO 4	Apply the knowledge of magnetism and electromagnetic theory to magnetic materials and devices and to understand the basic concepts of solid state physics used for the development of nanodevices. Identify appropriate seed idea for entrepreneurial realization.
CO 5	Analyze the principles behind various superconducting applications; explain the working of solid state lighting devices and fibre optic communication system. Identify appropriate seed idea for entrepreneurial realization.

Mapping of course outcomes with program outcomes

	PO 1	PO 2	PO 3	PO 4	PO 5	PO 6	PO 7	PO 8	PO 9	PO 10	PO 11	PO 12
CO 1	3	2	1				1	1	1	1		1
CO 2	3	2	1				1	1	1	1		1
CO 3	3	2	1				1	1	1	1		1
CO 4	3	2	1				1	1	1	1		1
CO 5	3	2	1				1	1	1	1		1

Justification

CO1.PO1	**Compute the quantitative aspects of waves and oscillations in engineering systems** like natural frequency, damped frequency, forced frequency, resonant frequency, band-width, Q-factor, wavelength, wave-velocity, frequency etc.
CO1.PO2	Review research literature to identify physics behind current and relevant innovations in the respective branch by assignment.
CO1. PO3	Identification and realization of entrepreneur seed idea corresponding to the module
CO1. PO7	Identification and realization of entrepreneur seed idea corresponding to the module to meet societal needs
CO1.PO8	Professional punctuality and understanding professional ethics by self-reading.
CO1.PO9	Effectively function individually and as a team in various class presentations.
CO1.PO10	Identification and realization of entrepreneur seed idea and its powerful communication (pitching) in respective multiple intelligence of the student
CO1.PO12	Identification and realization of entrepreneur seed idea corresponding to the module and develop concepts on 21st century skills that make learners future-ready.

CO2.PO1	**Apply the interaction of light with matter through interference, diffraction and identify these phenomena in different natural optical processes and optical instruments**. E.g.: measurement of fringe width, refractive index, path difference, phase difference, annihilation of reflection by interference, angle of diffraction, grating element: its dispersive power and resolving power.
CO2.PO2	Review research literature to identify physics behind current and relevant innovations in the respective branch by assignment.
CO2. PO3	Identification and realization of entrepreneur seed idea corresponding to the module
CO2. PO7	Identification and realization of entrepreneur seed idea corresponding to the module to meet societal needs
CO2.PO8	Professional punctuality and understanding professional ethics by self-reading.
CO2.PO9	Effectively function individually and as a team in various class presentations.
CO2.PO10	Identification and realization of entrepreneur seed idea and its powerful communication (pitching) in respective multiple intelligence of the student
CO2.PO12	Identification and realization of entrepreneur seed idea corresponding to the module and develop concepts on 21st century skills that make learners future-ready.

CO3.PO1	**Analyze the behaviour of matter in the atomic and subatomic level through the principles of quantum mechanics to perceive the microscopic processes in electronic devices.** E.g.: Wave-function and it's physical significance, Excitons, Schrodinger equations and application to particle in a one dimensional box, Energy Eigen values, tunneling, Quantum confinement, properties of nanomaterials.
CO3.PO2	Review research literature to identify physics behind current and relevant innovations in the respective branch by assignment.
CO3. PO3	Identification and realization of entrepreneur seed idea corresponding to the module

CO3. PO7	Identification and realization of entrepreneur seed idea corresponding to the module to meet societal needs
CO3.PO8	Professional punctuality and understanding professional ethics by self-reading.
CO3.PO9	Effectively function individually and as a team in various class presentations.
CO3.PO10	Identification and realization of entrepreneur seed idea and its powerful communication (pitching) in respective multiple intelligence of the student
CO3.PO12	Identification and realization of entrepreneur seed idea corresponding to the module and develop concepts on 21st century skills that make learners future-ready.

CO4.PO1	Apply the knowledge of magnetism and electromagnetic theory to magnetic materials and devices and to understand the basic concepts of solid state physics used for the development of nano devices.
CO4.PO2	Review research literature to identify physics behind current and relevant innovations in the respective branch by assignment.
CO4. PO3	Identification and realization of entrepreneur seed idea corresponding to the module
CO4. PO7	Identification and realization of entrepreneur seed idea corresponding to the module to meet societal needs.
CO4.PO8	Professional punctuality and understanding professional ethics by self-reading.
CO4.PO9	Effectively function individually and as a team in various class presentations.
CO4.PO10	Identification and realization of entrepreneur seed idea and its powerful communication (pitching) in respective multiple intelligence of the student.
CO1.PO12	Identification and realization of entrepreneur seed idea corresponding to the module and develop concepts on 21st century skills that make learners future-ready.

CO5.PO1	**Analyze the principles behind various superconducting applications, explain the working of solid state lighting devices and fibre optic communication system.** E.g.: Meissner effect, classification of superconducting materials, Qualitative idea of BCS theory. Working of various photonic devices like LED, various Photo detectors, Solar cell, Classification of Optical fibre cable based on refractive index, significance of Numerical aperture, fiber optic communication system and fiber optic sensors.
CO5.PO2	Review research literature to identify physics behind current and relevant innovations in the respective branch by assignment
CO5. PO3	Identification and realization of entrepreneur seed idea corresponding to the module
CO5. PO7	Identification and realization of entrepreneur seed idea corresponding to the module to meet societal needs.
CO5.PO8	Professional punctuality and understanding professional ethics by self-reading.
CO5.PO9	Effectively function individually and as a team in various class presentations.
CO5.PO10	Identification and realization of entrepreneur seed idea and its powerful communication (pitching) in respective multiple intelligence of the student

CO5.PO12	Identification and realization of entrepreneur seed idea corresponding to the module and develop concepts on 21st century skills that make learners future-ready.

WEB SOURCE REFERENCES:

1	http://www.animations.physics.unsw.edu.au/jw/oscillations.htm
2	http://www.itp.uni-hannover.de/~zawischa/ITP/diffraction.html
3	http://science.howstuffworks.com/environmental/energy/superconductivity.htm
4	http://plato.stanford.edu/entries/qm/
5	http://www.damtp.cam.ac.uk/user/tong/statphys.html
6	http://www.coherent.com/products/?834/Lasers

Mark distribution for the course

Total Marks	CIEmarks	ESEmarks	ESE Duration
150	50	100	3 hours

Continuous Internal Evaluation Pattern:

Attendance : 10 marks
Continuous Assessment Test (2 numbers) : 25 marks
Assignment/Quiz/Course project : 15 marks

Assessment Pattern

Bloom's Category	Continuous Assessment Tests		End Semester Examination (Marks)
	Test 1 (Marks)	Test 2 (Marks)	
Remember	15	15	30
Understand	25	25	50
Apply	10	10	20

Assignment:

1. Entrepreneurial Learning & Teaching
2. Module based assignments

ASSESSMENT METHODOLOGIES-DIRECT

✔ ASSIGNMENTS	☐ STUD. SEMINARS	✔ TESTS/MODEL EXAMS	✔ UNIV. EXAMINATION
☐ STUD. LAB PRACTICES	☐ STUD. VIVA	☐ MINI/MAJOR PROJECTS	☐ CERTIFICATIONS
☐ ADD-ON COURSES	☐ OTHERS		

Course plan for 2021 S2 AI&DS

Course title: Engineering Physics A

Faculty: Dr. Karthik Dhandapani

S.No.	Topics
1	Introduction to oscillations and waves, Harmonic oscillations, Damped harmonic motion-Derivation of differential equation and its solution.
2	Over damped, critically damped and Under damped Cases, Quality factor – Expression.
3	Forced oscillations-Differential Equation-Derivation of expressions for amplitude and phase of forced oscillations.
4	Amplitude Resonance - Expression for Resonant frequency, Quality factor and Sharpness of Resonance.
5	Electrical analogy of mechanical oscillators.
6	Wave motion- Derivation of one-dimensional wave equation and its solution,
7	Three-dimensional wave equation and its solution (no derivation).
8	Distinction between transverse and longitudinal waves. Transverse vibration in a
9	stretched string, Statement of laws of vibration
10	Numerical problems on oscillations and waves concepts
11	Interference of light-Principle of superposition of waves.
12	Theory of thin films - Cosine law (Reflected system).
13	Derivation of the conditions of constructive and destructive Interference.
14	Interference due to wedge shaped films -Determination of thickness and test for optical planeness.
15	Newton's rings - Measurement of wavelength
16	Newton's rings - Measurement of refractive index
17	Antireflection coatings
18	Diffraction of light, Fresnel and Fraunhofer classes of diffraction,
19	Diffraction grating-Grating equation.
20	Rayleigh criterion for limit of resolution, Resolving and Dispersive power of a grating with expression (no derivation)
21	Numerical problems on interference and diffraction
22	Introduction for the need of Quantum mechanics, Wave nature of Particles,
23	Uncertainty principle, Applications - Absence of electrons inside a nucleus and Natural line broadening mechanism.
24	Formulation of time dependent and independent Schrodinger wave equations-
25	Physical Meaning of wave function, Particle in a one-dimensional box- Derivation
26	for normalised wave function and energy eigen values, Quantum Mechanical
27	Tunnelling (Qualitative)
28	Introduction to nanoscience and technology, Increase in surface to volume ratio
29	for nanomaterials, Quantum confinement in one dimension, two dimension and three dimension-Nano sheets, Nano wires and Quantum dots

30	Properties of nanomaterials-mechanical, electrical and optical, Applications of nanotechnology (qualitative ideas)
31	Numerical problems on quantum mechanics
32	Gauss's law for Magnetic flux density, Ampere's Circuital law, Faraday's law in terms of EMF produced by changing magnetic flux, Classification of magnetic materials- para, dia and ferromagnetic materials.
33	
34	Derivation of Maxwell's equations in vacuum- Electromagnetic waves. Velocity of Electromagnetic waves in free space
35	
36	
37	Band theory of solids, Semiconductors- Fermi Dirac distribution, Fermi level and Fermi energy- Bloch theorem, phonons, dispersion relations and phonon modes (Qualitative). Solid state nano devices.
38	
39	
40	
41	Numerical problems from Module 4
42	Super conducting Phenomena- Meissner effect and perfect diamagnetism- Types of superconductors- Type I and Type II
43	
44	BCS Theory (Qualitative), High temperature superconductors, Applications of super conductivity
45	
46	Introduction to photonics-Photonic devices-Light Emitting Diode, Photo detectors -Junction and PIN photodiodes, Solar cells-I-V Characteristics.
47	
48	Optic fibre-Principle of propagation of light, Types of fibres -Step index and Graded index fibres, Numerical aperture –Derivation, Fibre optic communication system (block diagram), Industrial, Medical and Technological applications of optical fibre, Fibre optic sensors-Intensity Modulated and Phase modulated sensors.
49	
50	
51	
52	Numerical problems on Module 5

101908/CO900F

BASICS OF ELECTRICAL & ELECTRONICS ENGINEERING

Course101908/CO900F Basics of Electrical & Electronics Engineering

COURSE INFORMATION SHEET

PROGRAMME: **AIDS**	DEGREE: **BTech**
COURSE: **Basics of Electrical Engineering**	SEMESTER: 1 CREDITS: **3**
COURSE CODE: **101908/ CO900F** REGULATION: **2021 UG**	COURSE TYPE:**CORE**
COURSEAREA/DOMAIN: **Electrical Engineering**	CONTACT HOURS: **2 (Lecture hours/Week.)**
CORRESPONDING LAB COURSE CODE (IF ANY):**Yes**	LAB COURSE NAME: **Electrical Workshop**

SYLLABUS:

UNIT	DETAILS	HOURS
I	**MODULE 1: Elementary Concepts of Electric Circuits Elementary concepts of DC electric circuits:** Basic Terminology including voltage, current, power, resistance, emf; Resistances in series and parallel; Current and Voltage Division Rules; Ohms Law and Kirchhoff's laws-Problems; Star-delta conversion (resistive networks only-derivation not required)-problems. Analysis of DC electric circuits: Mesh current method - Matrix representation - Solution of network equations. Node voltage methods-matrix representation-solution of network equations by matrix methods. Numerical problems.	8
II	**MODULE 2: Elementary Concepts of Magnetic circuits, Electromagnetic Induction and AC fundamentals Magnetic Circuits:** Basic Terminology: MMF, field strength, flux density, reluctance - comparison between electric and magnetic circuits- Series and parallel magnetic circuits with composite materials, numerical problems. Electromagnetic Induction: Faraday's laws, problems, Lenz's law- statically induced and dynamically induced emfs - Self-inductance and mutual inductance, coefficient of coupling Alternating Current fundamentals: Generation of alternating voltages-Representation of sinusoidal waveforms: frequency, period, Average, RMS values and form factor of waveforms-Numerical Problems.	8
III	**MODULE 3: AC Circuits AC Circuits: Phasor representation of sinusoidal quantities. Trignometric, Rectangular, Polar and complex forms. Analysis of simple AC circuits:** Purely resistive, inductive & capacitive circuits; Inductive and capacitive reactance, concept of impedance. Average Power Power factor. Analysis of RL, RC and RLC series circuits-active, reactive and apparent power. Simple numerical problems. Three phase AC systems: Three phase AC systems: Generation of three phase voltages; advantages of three phase systems. Power	8

	generation, transmission and distribution - one line diagram.	
		TOTAL HOURS	24

TEXT/REFERENCE BOOKS:

T/R	BOOK TITLE/AUTHORS/PUBLICATION
T	**1. D P Kothari and I J Nagrath, "Basic Electrical Engineering", Tata McGraw Hill, 2010.**
T	**2. D C Kulshreshtha, "Basic Electrical Engineering", Tata McGraw Hill, 2010.**
T	3. ChinmoySaha, ArindhamHalder and DebaratiGanguly, Basic Electronics - Principles and Applications, Cambridge University Press, 2018.
T	4. M.S.Sukhija and T.K.Nagsarkar, Basic Electrical and Electronics Engineering, Oxford University Press, 2012.
T	5. Wayne Tomasi and Neil Storey, A Textbook On Basic Communication and Information Engineering, Pearson, 2010.
R	1. Del Toro V, "Electrical Engineering Fundamentals", Pearson Education..
R	2. T. K. Nagsarkar, M. S. Sukhija, "Basic Electrical Engineering", Oxford Higher Education.
R	3. Hayt W H, Kemmerly J E, and Durbin S M, "Engineering Circuit Analysis", Tata McGraw-Hill
R	**4. Hughes, "Electrical and Electronic Technology", Pearson Education**.
R	5. V. N. Mittle and Arvind Mittal, "Basic Electrical Engineering," Second Edition, McGraw Hill.
R	6. Parker and Smith, "Problems in Electrical Engineering", CBS Publishers and Distributors.
R	7. S. B. LalSeksena and KaustuvDasgupta, "Fundamentals of Electrical Engineering", Cambridge University Press.
R	8. AnantAgarwal, Jeffrey Lang, Foundations of Analog and Digital Electronic Circuits, Morgan Kaufmann Publishers, 2005
R	9. Bernard Grob, Ba sic Electronics, McGraw Hill.
R	10. A. Bruce Carlson, Paul B. Crilly, Communication Systems: An Introduction to Signals and Noise in Electrical Communication, Tata McGraw Hill, 5th Edition.

COURSE PRE-REQUISITES:

C.CODE	COURSE NAME	DESCRIPTION	SEM
	11th and 12th Standard Physics and Mathematics	A thorough knowledge of 11th and 12th standard Physics and Mathematics	

COURSE OBJECTIVES:

1	To equip students of all branches of Engineering with an understanding of the fundamental principles of Electrical Engineering
2	To prepare students for learning advanced topics in Electrical Engineering

COURSE OUTCOMES:

Sl. No.	DESCRIPTION
1	Students will be able to apply fundamental concepts and circuit laws to solve simple DC electric and magnetic circuits
2	Students will be able to develop and solve models of magnetic circuits
3	Students will be able toapply the fundamental laws of electrical engineering to solve simple ac circuits in steady state

Sl. No.	DESCRIPTION	BLOOMS' TAXONOMY LEVEL
1	Students will be able to apply fundamental concepts and circuit laws to solve simple DC electric and magnetic circuits	Application[Level 3]
2	Students will be able to develop and solve models of magnetic circuits	Comprehension [Level 2]
3	Students will be able to apply the fundamental laws of electrical engineering to solve simple ac circuits in steady state	Application [Level 3]

MAPPING COURSE OUTCOMES (COs) – PROGRAM OUTCOMES (POs) AND COURSE OUTCOMES (COs) – PROGRAM SPECIFIC OUTCOMES (PSOs):

	PO 1	PO 2	PO 3	PO 4	PO 5	PO 6	PO 7	PO 8	PO 9	PO 10	PO 11	PO 12	PSO 1	PSO 2	PSO 3
CO.1	3	1										2			
CO.2	3	1										2			
CO.3	3	1										2			
BEE	**3**	**1**										**2**			

JUSTIFATIONS FOR CO-PO MAPPING:

Mapping	L/H/M	Justification
CO.1-PO1	H	Students will be apply the knowledge of mathematics and science to solve various fundamental problems in simple DC circuits.
CO.1-PO2	L	Students will be able to formulate and analyze to find solution for circuit related problems in their higher semesters.
CO.1-PO12	M	Students will be able to recognize the need for life long learning in the broadest context of techonological change in the area of Electric circuits
CO.2-PO1	H	Students will be able to apply knowledge of magnetic circuits to solve engineering problems.
CO.2-PO2	L	Students will be able to analyze complex engineering problems using the first principles of magnetic circuits.
CO.2-PO12	M	Students will be able to do life long learning in the techonological change in the area of application of Magnetic circuits
CO.3-PO1	H	Students will be apply the knowledge of engineering fundamentals to solve complex problems in ac circuits.
CO.3-PO2	L	Students will be able to analyze complex engineering problems using the first principles of simple AC circuits.
CO.3-PO12	M	Students will be able to do life long learning in the techonological change in the area of application of AC circuits

GAPS IN THE SYLLABUS - TO MEET INDUSTRY/PROFESSION REQUIREMENTS:

Sl. No.	DESCRIPTION	PROPOSED ACTIONS	RELEVANCE WITH POs	RELEVANCE WITH PSOs
1	Introduction to Simulation	Additional Class in MATLAB and Simulink	1,2,12	

PROPOSED ACTIONS: TOPICS BEYOND SYLLABUS/ASSIGNMENT/INDUSTRY VISIT/GUEST LECTURER/NPTEL ETC

TOPICS BEYOND SYLLABUS/ADVANCED TOPICS/DESIGN:

SI. No.	DESCRIPTION	PROPOSED ACTIONS	RELEVANCE WITH POs	RELEVANCE WITH PSOs
1	Basic principles of DC and AC Machines and their application	Additional Class	1,2,12	

WEB SOURCE REFERENCES:

1	https://nptel.ac.in/courses/117106108

DELIVERY/INSTRUCTIONAL METHODOLOGIES:

☑CHALK & TALK	☑STUD. ASSIGNMENT	☑ WEB RESOURCES	
☑ LCD/SMART BOARDS	☐ STUD. SEMINARS	☐ ADD-ON COURSES	

ASSESSMENT METHODOLOGIES-DIRECT

☑ ASSIGNMENTS	☐ STUD. SEMINARS	☑ TESTS/MODEL EXAMS	☑ UNIV. EXAMINATION
☐ STUD. LAB PRACTICES	☐ STUD. VIVA	☐ MINI/MAJOR PROJECTS	☐ CERTIFICATIONS
☐ ADD-ON COURSES	☐ OTHERS		

ASSESSMENT METHODOLOGIES-INDIRECT

☑ ASSESSMENT OF COURSE OUTCOMES (BY FEEDBACK, ONCE)	☑ STUDENT FEEDBACK ON FACULTY (TWICE)
☐ ASSESSMENT OF MINI/MAJOR PROJECTS BY EXT. EXPERTS	☐ OTHERS

Prepared by **Approved by**

Dr. Unnikrishnan PC **HOD**

Course Plan

Sl.No	Date	Module	Planned	Action
1		1	Introduction	1
2		1	Basic terms like current,voltage,power etc	
3		1	Basic Terminology including voltage, current, power, resistance, emf;	
4		1	Resistances in series and parallel; Current and Voltage Division Rules;	
5		1	Capacitors & Inductors: V-I relations and energy stored.	
6		1	Ohms Law and Kirchhoff's laws-Problems;	
7		1	Star-delta conversion (resistive networks only-derivation not required)-	
8		1	Analysis of DC electric circuits: Basic Network terminology including network element, branch, junction point, node, mesh, loop	
9		1	Mesh current method - Matrix equations by matrix methods.	
10		1	Node voltage methods-matrix representation-solution of network	
11		2	Magnetic Circuits: Basic Terminology: MMF, field strength, flux density,	
12		2	reluctance - comparison between electric and magnetic circuits-	
13		2	numerical problems on series magnetic circuits.	
14		2	Electromagnetic Induction: Faraday's laws, problems, Lenz's law-	
15		2	statically induced and dynamically induced emfs -	
16		2	Self-inductance and mutual inductance, coefficient of coupling	
17		2	Alternating Current Fundamentals: Generation of alternating voltages-	
18		2	Representation of sinusoidal waveforms: frequency, period, Average, RMS values and form factor of periodic waveforms (sinusoidal)-Numerical Problems.	
19		3	Trigonometric, Rectangular, Polar and complex forms.	
20		3	AC Circuits: Phasor representation of sinusoidal quantities.	

21		3	Average Power, Power factor.	
22		3	Analysis of RL, RC and RLC series circuits-active, reactive and apparent power. 3	
23		3	Three phase AC systems: Three phase AC systems: Generation of three phase voltages; 3	
24		3	Transmission and distribution - one line diagram	

Tutorial Questions

1. Find the current through 30 Ω resistor in the circuit shown below using Kirchoff's laws.

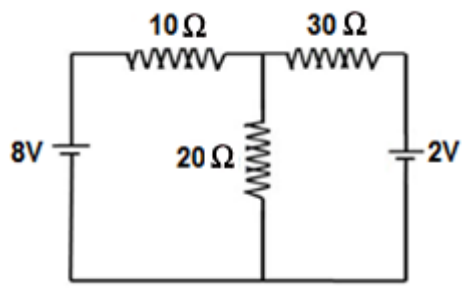

2. Find the equivalent resistance across the terminals A & B of the following electrical network.

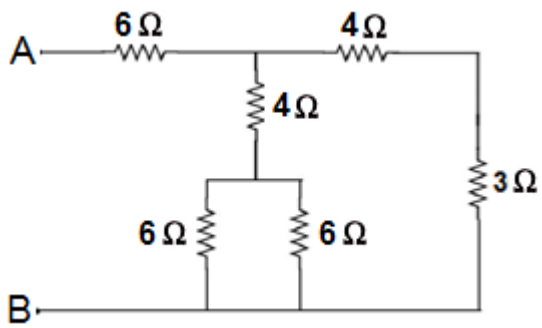

3. Convert the given delta network into its equivalent star network.

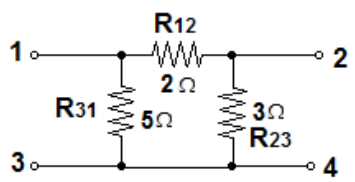

4. What is the phase angle relationship between applied ac voltage and circuit current in a purely capacitive circuit?
5. Define form factor. What is the form factor of a pure sinusoid waveform?
6. A resistance of 50 Ω is connected across a supply voltage, v = 50 sin 314t. Calculate the power dissipated in the resistor.
7. Define active, reactive and apparent power of an RL series circuit with help of a power triangle.

8. A mild steel ring has a mean diameter of 16 cm and a cross sectional area of 4 cm2. Calculate the m.m.f. to produce a flux of 400 μWb in the ring, if relative permeability of the material is 1000. Find also the reluctance of the ring.

9. Find Current in each resistance using Kirchoff's voltage law.

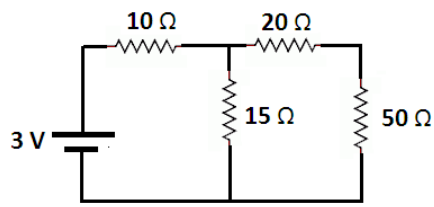

10. Find currents using Kirchoff's current law ONLY.

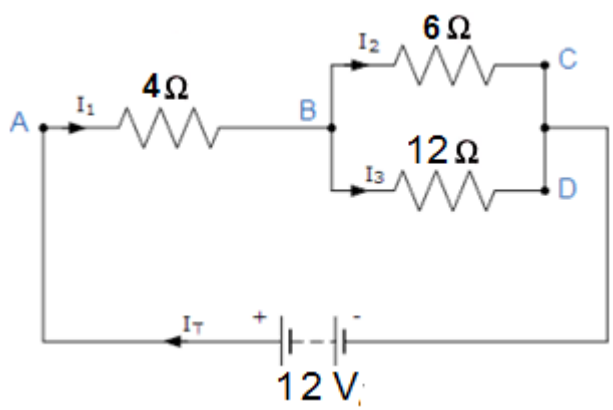

Assignment Questions

Assignment 1

1. For the given network, find the current through the 3 Ω resistor.

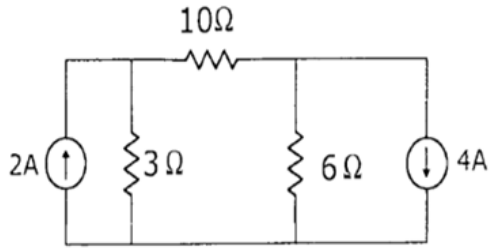

2. For the circuit shown below, find current through 8 Ω and 12 Ω resistors.

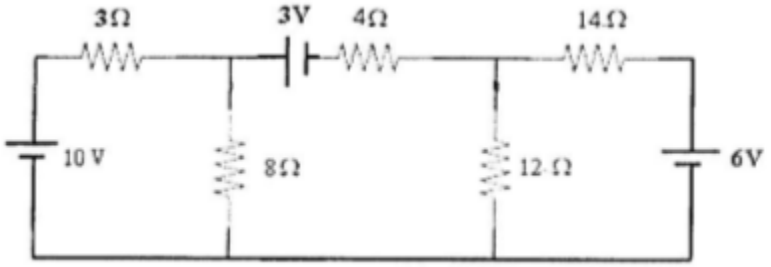

3. By mesh analysis, find the currents flowing through 4 Ω and 3 Ω resistors in the following network.

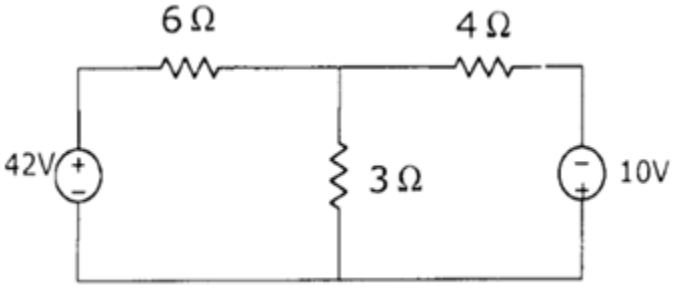

4. Calculate the current in each branch of the following circuit using mesh analysis.

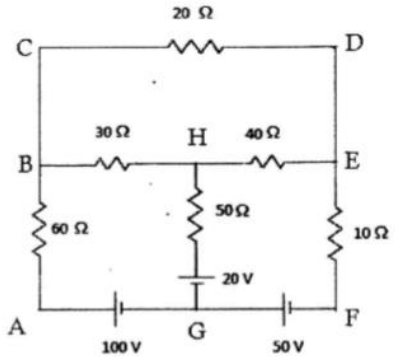

5. Find the equivalent resistance and current from a to b. Use star-delta or delta-star transformation.

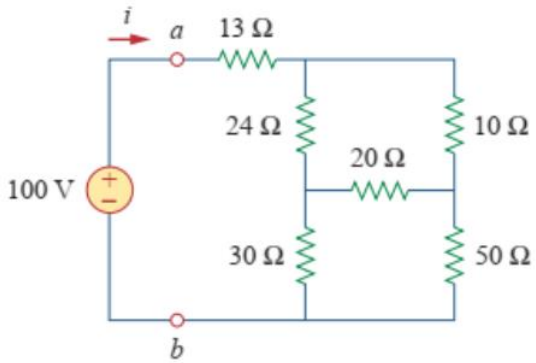

6. Find the current through the 5 Ω resistor using Nodal Analysis.

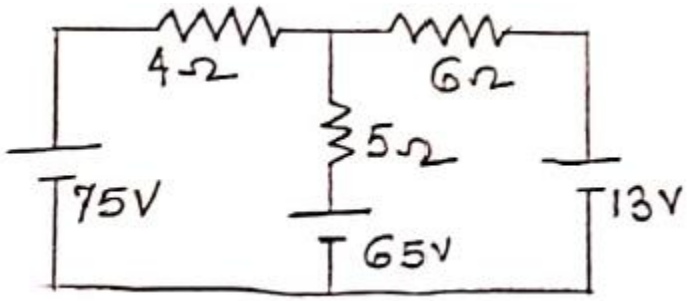

Assignment 2

1. An iron ring 30 cm mean diameter is made of square of iron of 2 cm × 2 cm cross section and is uniformly wound with 400 turns of wire of 2 mm2 cross-section. Calculate the value of the self-inductance of the coil. Assume μr = 800.
2. A mild steel ring has a mean diameter of 16 cm and a cross sectional area of 4 cm2. Calculate the m.m.f. to produce a flux of 400 μWb in the ring, if relative permeability of the material is 1000. Find also the reluctance of the ring.
3. Calculate the form factor and peak factor of a half wave and `full wave rectified sine wave.
4. When a current of 2mA is supplied to a coil with 100 turns, a magnetic flux of magnitude 0.2Wb is linked with it. Find the self-inductance of this coil.
5. Determine the energy stored in an inductor of inductance 100mH when a current of 0.2A is passed through it.
6. A long solenoid has 500 turns. When a current of 2 A is passed through it, the resulting magnetic flux linked with each turn of the solenoid is 4×10^{-3} Wb. find self-inductance.
7. A solenoid (air core) has 400 turns, is 20 cm long and has a cross-section of $4cm^2$. Then find the coefficient of self-induction.
8. When a current of 4A between two coils changes to 12A in 0.5s in primary and induces an emf of 50mV in the secondary. Calculate the mutual inductance between the two coils.
9. A solenoid of 500 turns is wound on an iron core of relative permeability 800. The length and radius of the solenoid are 40 cm and 3 cm respectively. Calculate the average emf induced in the solenoid if the current in it changes from 0 to 3 A in 0.4 second.
10. The self-inductance of an air-core solenoid is 4.8 mH. If its core is replaced by iron core, then its self-inductance becomes 1.8 H. Find out the relative permeability of iron.

101908/CO900F

BASICS OF ELECTRONICS ENGINEERING

COURSE INFORMATION SHEET

PROGRAMME: **ARTIFICIAL INTELLIGENCE AND DATA SCIENCE**	DEGREE: B.TECH (Autonomous) UNIVERSITY: APJ ABDUL KALAM TECHNOLOGICAL UNIVERSITY
COURSE: BASICS OF ELECTRICAL & ELECTRONICS ENGINEERING	SEMESTER: S1 CREDITS: 2+2
COURSE CODE:**101908/CO900F** REGULATION: **2021**	COURSE TYPE: CORE
COURSE AREA/DOMAIN: ELECTRICAL AND ELECTRONICS	CONTACT HOURS: 4 hours/week
CORRESPONDING LAB COURSE CODE (IF ANY):101908/CO922U	LAB COURSE NAME: ELECTRICAL AND ELECTRONICS WORKSHOP

SYLLABUS:

Module	Topic	Hours
4	**Introduction to Semiconductor devices**	
4.1	**Evolution of electronics** – Vacuum tubes to nano electronics (in evolutional perspective only)	**1**
4.2	**Resistors, Capacitors and Inductors:** Types, Specifications, Standard Values, Color coding (No constructional features)	**2**
4.3	**PN Junction diode:** Principles of operation, V-I characteristics, Principle of Avalanche breakdown	**2**
4.4	**Bipolar Junction Transistors:** PNP and NPN structures, Principle of operation, Relation between current gains in CE, CB and CC, input and output characteristics of common emitter configuration	**3**
5	**Basic Electronic Circuits and Instrumentation**	
5.1	**Rectifiers and power supplies:** Block diagram of a dc power supply, working of a Half wave rectifier & full wave bridge rectifier, capacitor filter (no analysis), Working of simple Zener voltage regulator	**3**
5.2	**Amplifiers:** Block diagram of public address system, Circuit diagram and working of common emitter (RC coupled) amplifier with its frequency response, Concept of voltage divider biasing	**4**
5.3	**Electronic Instrumentation:** Block diagram of an electronic instrumentation system	**2**
6	**Introduction to Communication Systems**	
6.1	**Evolution of communication systems –** Telegraphy to 5G	**1**
6.2	**Radio communication-** Principles of AM and FM, frequency bands for various communication systems, block diagram of super heterodyne	**4**

	receiver.	
6.3	**Mobile Communication –** Basic principle of cellular communications, principles and block diagram of GSM	**2**

TEXT/REFERENCE BOOKS:

T/R	BOOK TITLE/AUTHORS/PUBLICATION
T1	Mitchel Schultz, *Grob's Basic Electronics*, 12th edition, McGraw-hill education, 2015.
T2	N.N. Bhargava, *Basic Electronics and Linear Circuits*, Tata McGraw-hill Publishing Company Limited, 2008.
T3	Wayne Tomasi, *Advanced Electronic Communications Systems*, 5 th edition, Pearson Education Asia, 2007.
R1	Anant Agarwal, Jeffrey Lang, *Foundations of Analog and Digital Electronic Circuits,* Morgan Kaufmann Publishers, 2005.
R2	Wayne Tomasi and Neil Storey, *A Textbook On Basic Communication and Information Engineering*, Pearson, 2010.
R3	A. Bruce Carlson, Paul B. Crilly, *Communication Systems: An Introduction to Signals and Noise in Electrical Communication*, Tata McGraw Hill, 5th Edition.
R4	George Kennedy, Bernard Davis, S. R. M Prasanna, *Kennedy's Electronic Communication Systems*, 6th edition, McGraw Hill Education (India) Private Limited, 2017.
R5	Thomas L Floyd, *Electronic Devices*, 9 th edition, Pearson Education Asia, 2015.
R6	Wayne Tomasi, *Electronic Communications Systems: Fundamentals Through Advanced*, 5 th edition, Pearson Education, 2008.

COURSE PRE-REQUISITES:

C.CODE	COURSE NAME	DESCRIPTION	SEM
NIL			

COURSE OBJECTIVES:

1.	To get basic idea about types, specification and common values of passive and active components.
2.	To familiarize the working of diodes and transistors
3.	To get a fundamental idea of basic communication systems and entertainment electronics

COURSE OUTCOMES:

SL. NO.	DESCRIPTION	Blooms' Taxonomy Level
C0.4	To identify the different passive & active components used in electronic industry for common application and to **familiarize** with the working of PN junction diode & BJT and to **describe** working of a voltage amplifier	Remember and Understand (level 1, 2)

C0.5	To **analyze** simple circuits using diodes like rectifiers and voltage regulators and to **understand** the working principle electronic instrumentation systems.	Remember and Understand (Level 1,2)
C0.6	To **understand** the basic principle of radio and cellular communication systems.	Understand (level 2)

CO-PO AND CO-PSO MAPPING

	PO 1	PO 2	PO 3	PO 4	PO 5	PO 6	PO 7	PO 8	PO 9	PO 10	PO 11	PO 12	PSO 1	PSO 2	PSO 3
CO4	2	-	-	-	-	-	-	-	-	-	-	-	3	-	-
CO5	2	-	-	-	-	-	-	-	-	-	-	2	3	-	-
CO6	2	-	-	-	-	-	-	-	-	-	-	2	3	-	-
100908/CO900F	2	-	-	-	-	-	-	-	-	-	-	2	3	-	-

JUSTIFATIONS FOR CO-PO MAPPING

MAPPING	LOW/MEDIUM/ HIGH	JUSTIFICATION
CO.4-PO1	M	Students will learn passive electronic components,working of PN junction diode and Bipolar Junction Transistor.
CO.5-PO1	M	Students will learn working of different diode circuits and the basic principle of electronic instrumentation system
CO.6-PO1	M	Students will get a fundamental idea of basic communication systems.
CO.5-PO12	M	Students will be able the idea about voltage regulator
CO.6-PO12	M	Students will get the concept of cellular communication
CO.4-PSO1	H	Students will learn passive electronic components, diode and working of different types of Transistors.
CO.5-PSO1	H	Students will learn working of different diode circuits and electronic instrumentation system.
CO.6-PSO1	H	Students will learn working of radio and mobile communication system

GAPS IN THE SYLLABUS - TO MEET INDUSTRY/PROFESSION REQUIREMENTS:

SL NO	DESCRIPTION	PROPOSED ACTIONS	RELEVANCE WITH POs	RELEVANCE WITH PSOs
1	Zener diode & Characteristic	Lecture	1,2	1

TOPICS BEYOND SYLLABUS/ADVANCED TOPICS/DESIGN:

SL NO	DESCRIPTION	PROPOSED ACTIONS	RELEVANCE WITH POs	RELEVANCE WITH PSOs
1	Analysis of rectifier parameters	1,2	1	1

WEB SOURCE REFERENCES:

1.	http://nptel.ac.in/courses/117106087
2.	http://www.electronics-tutorials.ws/design
3.	https://nptel.ac.in/courses/108101091
4.	https://nptel.ac.in/courses/117103063

DELIVERY/INSTRUCTIONAL METHODOLOGIES:

☑ CHALK & TALK	☑ STUD. ASSIGNMENTS	☑ WEB RESOURCES	☑ ONLINE CLASSES
☑LCD/SMART BOARDS	☐STUD. SEMINARS	☐ADD-ON COURSES	

ASSESSMENT METHODOLOGIES-DIRECT

☑ASSIGNMENTS	☐STUD. SEMINARS	☑ TESTS/MODEL EXAMS	☑UNIV. EXAMINATION
☐STUD. LAB PRACTICES	☐STUD. VIVA	☐MINI/MAJOR PROJECTS	☐ CERTIFICATIONS
☐ADD-ON COURSES	☐ OTHERS		

ASSESSMENT METHODOLOGIES-INDIRECT

☑ ASSESSMENT OF COURSE OUTCOMES (BY FEEDBACK, ONCE)	☑ STUDENT FEEDBACK ON FACULTY (TWICE)
☐ ASSESSMENT OF MINI/MAJOR PROJECTS BY EXT. EXPERTS	☐ OTHERS

Prepared by **Approved by**

Aparna George
(Faculty in Charge)

Dr. Hari C V
(HOD, DAEI)

100908/CO900F:BASICS OF ELECTRICAL AND ELECTRONICS ENGINEERING		
COURSE PLAN		
Sl.No	**Module**	**Topics**
1	4	Introduction
2	4	Evolution of Electronics
3	4	Resistors: types, specifications. Standard values, color coding
4	4	Capacitors: types, specifications. Standard values, color coding
5	4	Inductors: types, specifications. Standard values, color coding
6	4	PN junction, Formation of depletion region
7	4	PN Junction diode: Principle of operation
8	4	V-I characteristics, principle of avalanche breakdown
9	4	Bipolar Junction Transistors: PNP and NPN structures
10	4	Principle of operation, relation between current gains in CE, CB and CC configuration
11	4	Input and output characteristics of common emitter configuration.
12	5	Block diagram description of a dc power supply
13	5	Half wave rectifier
14	5	Working of a full wave bridge rectifier
15	5	Capacitor filter
16	5	Working of simple zener voltage regulator
17	5	Amplifiers: Block diagram of Public Address system
18	5	Need for Biasing - Concept of voltage divider biasing
19	5	Working of common emitter (RC coupled) amplifier
20	5	Frequency response
21	5	Electronic Instrumentation: Block diagram of an electronic instrumentation system
22	6	Evolution of communication systems – Telegraphy to 5G
23	6	Principle of AM & FM, frequency bands used for various communication systems
24	6	Block diagram of super heterodyne receiver
25	6	Mobile communication: basic principles of cellular communications
26	6	Principle and block diagram of GSM.

Assignment Questions

1. Explain the applications of electronics in detail (Any 5 fields).
2. Explain the applications of any 5 resistors, 5 capacitors and 3 inductors in detail.
3. Calculate capacitance for two plates each with an area of 2 m^2, separated by 1cm, with a dielectric air. (The absolute permittivity is $8.854 * 10^{-12}$ F/m).
4. Determine the relationship between α and β, where α and β are the current amplification factors in CB and CE respectively. In CB configuration, current amplification factor is 0.9. If Ic = 0.9mA, determine the base current.
5. For the NPN transistor shown in figure, determine the value of emitter current and common base current amplification factor.

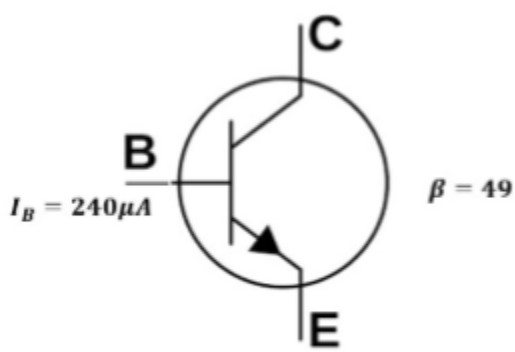

6. Explain RC coupled amplifier with neat circuit diagram.
7. Explain about super heterodyne receiver in detail.
8. Given a single stage RC coupled amplifier with gain equal to 50. Assume that the input is a sine wave with peak-to-peak voltage = 10mV. Calculate the output voltage. [Hint : Gain = Output voltage/Input voltage]

Tutorial Questions (NA)

101903/CO200G

PROGRAMMING IN C

COURSE INFORMATION SHEET

PROGRAMME: ARTIFICIAL INTELLIGENCE AND DATA SCIENCE	**DEGREE:** BTECH
COURSE: PROGRAMMING IN C	**SEMESTER:** II **CREDITS:** 4
COURSE CODE : 101903/CO200G **REGULATION:** 2021	**COURSE TYPE:** CORE
COURSE AREA/DOMAIN: PROGRAMMING, DATA STRUCTURES AND ALGORITHMS	**CONTACT HOURS**: 2+1(Tutorial) +2 (Lab) =5 hours/Week.
CORRESPONDING LAB COURSE CODE (IF ANY): NIL	**LAB COURSE NAME:** NIL

SYLLABUS:

UNIT	DETAILS	HOURS
I	Basics of Computer Architecture: processor, Memory, Input& Output devices Application Software & System software: Compilers, interpreters, High level and low level languages Introduction to structured approach to programming, Flow chart Algorithms, Pseudo code (bubble sort, linear search - algorithms and pseudo code	7
II	Basic structure of C program: Character set, Tokens, Identifiers in C, Variables and Data Types , Constants, Console IO Operations, printf and scanf Operators and Expressions: Expressions and Arithmetic Operators, Relational and Logical Operators, Conditional operator, size of operator, Assignment operators and Bitwise Operators. Operators Precedence Control Flow Statements: If Statement, Switch Statement, Unconditional Branching using goto statement, While Loop, Do While Loop, For Loop, Break and Continue statements.(Simple programs covering control flow).	**7**
III	Arrays Declaration and Initialization, 1-Dimensional Array, 2-Dimensional Array String processing: In built String handling functions (strlen, strcpy, strcat and strcmp, puts, gets) Linear search program, bubble sort program, simple programs covering arrays and strings	**7**
IV	Working with functions Introduction to modular programming, writing functions, formal parameters, actual parameters Pass by Value, Recursion, Arrays as Function Parameters structure, union, Storage Classes, Scope and life time of variables, simple programs using functions	**7**
V	Pointers and Files Basics of Pointer: declaring pointers, accessing	**7**

	data though pointers, NULL pointer,array access using pointers, pass by reference effect File Operations: open, close, read, write, append Sequential access and random access to files: In built file handlingfunctions(rewind() ,fseek(), ftell(), feof(), fread(), fwrite()), simple programs covering pointers and files.	
	TOTAL HOURS	**35**

Text Books

1. Schaum Series, Gottfried B.S.,Tata McGraw Hill,Programming with C
2. E. Balagurusamy, McgrawHill,Programming in ANSI C
3. Asok N Kamthane, Pearson, Programming in C
4. Anita Goel, Pearson, Computer Fundamentals

Reference Books

1. Anita Goel and Ajay Mittal, Pearson, Computer fundamentals and Programming in C
2. Brian W. Kernighan and Dennis M. Ritchie, Pearson, C Programming Language
3. Rajaraman V, PHI, Computer Basics and Programming in C
4. Yashavant P, Kanetkar, BPB Publications, Let us C Course Contents and Lecture

COURSE OBJECTIVES:

1	The objective of the course is to prepare the Engineering Graduates capable of writing readable C programs to solve computational problems that they may have to solve in their professional life. The course content is decided to cover the essential programming fundamentals which can be taught within the given slots in the curriculum

COURSE OUTCOMES:

SNO	DESCRIPTION
CO1	Analyze a computational problem and develop an algorithm/flowchart to find its solution
CO2	Develop readable* C programs with branching and looping statements, which uses Arithmetic, Logical, Relational or Bitwise operators
CO3	Write readable C programs with arrays, structure or union for storing the data to be processed
CO4	Divide a given computational problem into a number of modules and develop a readable multi-function C program by using recursion if required, to find the solution to the computational problem
CO5	Write readable C programs which use pointers for array processing and parameter passing
CO6	Develop readable C programs with files for reading input and storing output

readable* - readability of a program means the following:

1. Logic used is easy to follow

2. Standards to be followed for indentation and formatting
3. Meaningful names are given to variables
4. Concise comments are provided wherever needed

CO-PO AND CO-PSO MAPPING

	PO1	PO2	PO3	PO4	PO5	PO6	PO7	PO8	PO9	PO10	PO11	PO12	PSO1	PSO2	PSO3
CO1	3	3	3	2		1	-	-	-	1	1	2	-	-	1
CO2	2	2	2	1	1	-	-	-	-	1	-	2	-	-	1
CO3	2	2	2	1	2	-	-	-	-	1	-	2	-	-	1
CO4	3	3	3	2	3	-	-	-	-	1	1	2	-	-	2
CO5	3	2	-	-	2	-	-	-	-	1	-	2	-	-	1
CO6	3	3	-	-	3					3		3	-	-	2

JUSTIFICATIONS FOR CO-PO MAPPING

Mapping	LOW/MEDIUM/HIGH	Justification
CO1-PO1	H	Students will study the fundamental of programming by analyzing a problem and develop an algorithm/ flowchart to find its solution.
CO1-PO2	H	The students will be able to analyze a given complex problem since they have to understand the problem in depth to write an algorithm/ flowchart
CO1-PO3	H	The students will be able to develop and design solution to complex problems and express the solution they have designed using flowchart/ algorithm/ pseudocode.
CO1-PO4	M	The students will be able to use the skills of algorithm design in design of experiments and interpretation of data
CO1-PO6	L	The students will be able to write algorithm / draw flowchart for a solution catering to the needs of the society.
CO1-PO10	L	The students will be able to communicate the idea of their solution effectively in a step by step manner using algorithm or pictorially by using a flowchart.
CO1-PO11	L	The students will be able to write algorithm / draw flowchart for a solution catering to the needs of the society.
CO1-PO12	M	The students will be able to use their algorithm writing / flowchart drawing skills whenever they need to design

		solutions to complex real life problems.
CO1-PSO3	L	The skill of algorithm development is fundamental to research and industry.
CO2-PO1	M	The concepts of branching, looping and operators are fundamental to our engineering specialization of problem solving.
CO2-PO2	M	The concepts of branching, looping and operators are needed in analyzing complex engineering problems.
CO2-PO3	M	The concepts of branching, looping and operators are inevitable when designing solutions to complex problems.
CO2-PO4	L	The concepts of branching, looping and operators are used in the design of experiments and data interpretation.
CO2-PO5	L	The concepts of branching, looping and operators are useful in usage of different tools since every tool makes use of these fundamentals.
CO2-PO10	L	The concepts of branching, looping and operators are used in the design of solutions which is efficient for communicating the design to others.
CO2-PO12	M	The concepts of branching, looping and operators are used in all areas of research as well as industry.
CO2-PSO3	L	The concepts of branching, looping and operators are the fundamentals in programming and they are used in areas of research as well as developing new products/ ideas.
CO3-PO1	M	The concepts of arrays and structure for data storage are fundamental to our engineering specialization of problem solving.
CO3-PO2	M	The concepts of arrays and structure for data storage are needed in analyzing complex engineering problems.
CO3-PO3	M	The concepts of arrays and structure for data storage are inevitable when designing solutions to complex problems.
CO3-PO4	L	The concepts of arrays and structure for data storage are used in the design of experiments and data interpretation.
CO3-PO5	M	The concepts of arrays and structure for data storage are useful in usage of different tools since every tool makes use of these fundamentals.
CO3-PO10	L	The concepts of arrays and structure for data storage are used in the design of solutions which is efficient for communicating the design to others.
CO3-PO12	M	The concepts of arrays and structure for data storage are used in all areas of research as well as industry.

CO3-PSO3	L	The concepts of arrays and structure for data storage are the fundamentals in programming and they are used in areas of research as well as developing new products/ ideas.
CO4-PO1	H	The concepts of dividing the complex problem into modules forming multi function programs and the concept of recursive functions are fundamental to our engineering specialization of problem solving.
CO4-PO2	H	The concepts of dividing the complex problem into modules forming multi function programs and the concept of recursive functions are needed in analyzing complex engineering problems.
CO4-PO3	H	The concepts of dividing the complex problem into modules forming multi function programs and the concept of recursive functions are inevitable when designing solutions to complex problems.
CO4-PO4	M	The concepts of dividing the complex problem into modules forming multi function programs and the concept of recursive functions are used in the design of experiments and data interpretation.
CO4-PO5	H	The concepts of dividing the complex problem into modules forming multi function programs and the concept of recursive functions are useful in usage of different tools since every tool makes use of these fundamentals.
CO4-PO10	L	The concepts of dividing the complex problem into modules forming multi function programs and the concept of recursive functions are used in the design of solutions which is efficient for communicating the design to others.
CO4-PO11	L	The concepts of dividing the complex problem into modules forming multi function programs and the concept of recursive functions are fundamental to any application related to engineering.
CO4-PO12	M	The concepts of dividing the complex problem into modules forming multi function programs and the concept of recursive functions are used in all areas of research as well as industry.
CO4-PSO3	M	The concepts of dividing the complex problem into modules forming multi function programs and the concept of recursive functions are needed in analyzing complex engineering problems in all areas of research and industry.

CO5-PO1	H	The concepts of pointers for array processing and parameter passing are fundamental to our engineering specialization.
CO5-PO2	M	The concepts of pointers for array processing and parameter passing are needed in analyzing complex engineering problems
CO5-PO5	M	The concepts of pointers for array processing and parameter passing are useful in modern tool usage and helps in modeling and predicting complex engineering problems.
CO5-PO10	L	The concepts of pointers for array processing and parameter passing are useful in giving more clear instructions to the user and thereby enabling effective communication.
CO5-PO12	M	The concepts of pointers for array processing and parameter passing are important in all areas of research and also help in adapting to technological changes.
CO5-PSO3	L	The concepts of pointers for array processing and parameter passing are useful in industry for developing software supporting instruments
CO6-PO1	H	The concept of files for data input and output are fundamental to CS and are very helpful in manipulating large amount of data input and output of complex problems.
CO6-PO2	H	The concept of files for data input and output are helpful in analyzing problems and reviewing the output obtained after doing complex programs in C.
CO6-PO5	H	The concept of files for data input and output will be very useful when we use modern tools for data analysis and prediction
CO6-PO10	H	The concept of files for data input and output helps to store the results in an organized manner so that it can be effectively communicated to outside world
CO6-PO12	H	The concept of files for data input and output is an inevitable concept that can be used with almost every real life engineering problem and this helps to manipulate data effectively.
CO6-PSO3	M	The concept of files for data input and output helps to model and analyze complex problems effectively so that it helps develop programs that meets industry standards

GAPS IN THE SYLLABUS - TO MEET INDUSTRY/PROFESSION REQUIREMENTS:

SNO	DESCRIPTION	PROPOSED ACTIONS
1	NIL	

TOPICS BEYOND SYLLABUS/ADVANCED TOPICS/DESIGN:

SL NO	DESCRIPTION	PROPOSED ACTIONS
1	Dynamic Memory Allocation	Lecture
2	Command Line Arguments	Reading assignment

DELIVERY/INSTRUCTIONAL METHODOLOGIES:

✓ CHALK & TALK	✓ STUD. ASSIGNMENT	✓ WEB RESOURCES
✓ LCD/SMART BOARDS	STUD SEMINARS	ADD-ON COURSES

ASSESSMENT METHODOLOGIES-DIRECT

✓ ASSIGNMENTS	STUD. SEMINARS	✓ TESTS/MODEL EXAMS	✓ UNIV. EXAMINATION
✓ STUD. LAB PRACTICES	✓ STUD. VIVA	Micro/Mini/Main PROJECTS	CERTIFICATIONS
ADD-ON COURSES	OTHERS		

ASSESSMENT METHODOLOGIES-INDIRECT

✓ ASSESSMENT OF COURSE OUTCOMES (BY FEEDBACK, ONCE)	✓ STUDENT FEEDBACK ON FACULTY (TWICE)
ASSESSMENT OF MINI/MAJOR PROJECTS BY EXT. EXPERTS	OTHERS

Prepared by **Approved by**

Ms. Viji Mohan A **Dr. Neeba E A, HOD**

COURSE PLAN

Sl.No	Module	Planned Day	Planned
1	1	Day 1	Basics of Computer Architecture: Processor, Memory, Input& Output devices
2	1	Day 2	Application Software & System software: Compilers, interpreters, High level and low level languages
3	1	Day 3	Introduction to structured approach to programming, Flow chart
4	1	Day 4	Lab 1- Familiarization of Hardware Components of a Computer
5	1	Day 5	Components identification
6	1	Day 6	Algorithms, Pseudo code
7	1	Day 7	Algorithms, Pseudo code of simple c programs – Assignment 1 to students
8	2	Day 8	Basic structure of C program: Character set, Tokens, Identifiers in C, Variables and Data Types
9	2	Day 9	Lab 2- Familiarization of Linux environment – How to do Programming in C with Linux, Familiarization of console I/O and operators in C
10	2	Day 10	Constants, Console IO Operations, printf and scanf
11	2	Day 11	Expressions and Arithmetic Operators, Relational and Logical Operators
12	2	Day 12	Conditional operator, sizeof operator, Assignment

			operators and Bitwise Operators
13	2	Day 13	Lab 3- Familiarization of control statements in C
14	2	Day 14	Operators Precedence,Control Flow Statements: If Statement
15	2	Day 15	Switch Statement, Unconditional Branching using goto statement
16	2	Day 16	While Loop, Do While Loop
17	3	Day 17	Lab 4- Familiarization of Arrays in C
18	2	Day 18	For Loop, Break and Continue statements.(Simple programs covering control flow)
19	2	Day 19	Tutorial -1 (Operators and Control Statements
20	3	Day 20	Arrays Declaration and Initialization
21	3	Day 21	Lab 5- Familiarization of Strings in C
22	4	Day 22	Lab 6- Familiarization of Structures and Union in C
23	3	Day 23	1-Dimensional Array-Simple programs - bubble sort, linear search – including algorithms and pseudocode
24	3	Day 24	2-Dimensional Array-Simple programs
25	4	Day 25	Lab 7- Familiarization of functions in C

26	3	Day 26	Programs on Arrays and Matrix
27	3	Day 27	Programs on Arrays and Matrix
28	3	Day 28	String processing- Declaration and Initialization
29	4	Day 29	Lab 8- Familiarization of recursive functions in C
30	3	Day 30	In built String handling functions(strlen, strcpy, strcat and strcmp, puts, gets)
31	3	Day 31	User defined functions corresponding to in buit functions
32	3	Day 32	Tutorial 2 – Arrays and Strings
33	5	Day 33	Lab 9 - Familiarization of pointers in C
34	4	Day 34	Introduction to modular programming, writing functions -formal parameters and actual parameters
35	4	Day 35	Pass by Value, Pass by reference, Arrays as Function Parameters
36	4	Day 36	Recursion, Assignment 2 to students
37	5	Day 37	Lab 10 - Familiarization of file operations in C
38	4	Day 38	Simple programs using functions
39	4	Day 39	structure, union

40	4	Day 40	Programs of structure, union
41	5	Day 41	Lab 11- Lab Exam
42	4	Day 42	Storage Classes,Scope and life time of variables
43	4	Day 43	Tutorial 3 – Functions and Structures
44	5	Day 44	Basics of Pointer: declaring pointers, accessing data though pointers
45	5	Day 45	NULL pointer,array access using pointers
46	5	Day 46	pass by reference effect, Simple programs covering pointers
47	5	Day 47	File Operations: open, close, read, write, append
48	5	Day 48	Sequential access and random access to files
49	5	Day 49	Lab 12- Revision and Viva
50	5	Day 50	In built file handlingfunctions-rewind() ,fseek(), ftell(), feof(), fread(), fwrite()
51	5	Day 51	Simple Programs of Files
52	5	Day 52	Tutorial 4 – Files and Pointers
53	5	Day 53	Lab 13 - Revision and Viva

Programming in C: Tutorial -1

1. Write a c program to find the perfect numbers within a given number of range
2. Write a program in C to find the prime numbers within a range of numbers
3. Write a program in C to find the number and sum of all integer between 100 and 200 which are divisible by 9
4. Write a C program to find HCF (Highest Common Factor) of two numbers.
5. Write a C program to find the length of a string without using the library function.
6. Write a C program to print all natural numbers in reverse (from n to 1). - using while loop.
7. Write a C program to find frequency of each digit in a given integer

Programming in C: Tutorial -2

1. Write a C Program to Copy a String
2. Write a C Program remove all characters in a string except alphabets
3. Write a C Program sort elements in the lexicographical order (dictionary order)
4. Write a program in C to count a total number of duplicate elements in an array
5. Write a program in C to find the maximum and minimum element in an array
6. Write a program in C to separate odd and even integers in separate arrays
7. Write a program in C to find the second largest element in an array

Programming in C : Assignment

Write a program to do the following

1. To check whether a number is a perfect number
2. To find the ASCII value of a character
3. To swap two numbers
4. To check whether a number is odd or even
5. To check whether a character is vowel or consonant
6. To find the roots of a quadratic equation
7. To check whether a year is a leap year
8. To check whether a number is positive or negative
9. To display the Fibonacci sequence upto n terms
10. To display the factors of a number
11. To find the power of a number without using the pow function
12. To find GCD of two numbers

LIST OF LAB EXPERIMENTS

S2 AI & DS

DAY 1

1. Familiarization of Hardware Components of a Computer.

DAY 2

2. Familiarization of Linux environment – How to do Programming in C with Linux.

3. Familiarization of console I/O and operators in C

   i) Display "Hello World"

   ii) Read two numbers, add them and display their sum

   iii) Read the radius of a circle, calculate its area and display it

   iv)Evaluate the arithmetic expression ((a -b / c * d + e) * (f +g)) and display its solution.Readthe values of the variables from the user through console.

DAY 3

4. Read 3 integer values and find the largest among them.

5. Read a Natural Number and check whether the number is prime or not.

6. Read a Natural Number and check whether the number is Armstrong or not.

DAY 4

7. Read n integers, store them in an array and find their sum and average.

8. Read n integers, store them in an array and search for an element in the array using an algorithm for Linear Search.

9. Read n integers, store them in an array and sort the elements in the array using Bubble Sort Algorithm.

DAY 5

10. Read a string (word), store it in an array and check whether it is a palindrome

word or not.

11.Read two strings (each one ending with a $ symbol), store them inarrays and concatenate them without using library functions.

12. Read a string (ending with a $ symbol), store it in an array and count the number of vowels,

consonants and spaces in it.

DAY 6

13. Read four inputs representing four points in the Euclidean space,store these values in structure variables.

i) Compute the Euclidean distance between two pair of points.

ii) Find the sum of those two distance values.

14. Using structure, read and print data of n employees (Name, Employee Id and Salary)

15. Declare a union containing 5 string variables (Name, House Name, City Name, State and Pin code) each with a length of C_SIZE (user defined constant). Then, read and display the address of aperson using a variable of the union.

DAY 7

16. Read a string (word), store it in an array and obtain its reverse by using a user defined function.

17. Write a menu driven program for performing matrix addition, multiplication and finding thetranspose. Use functions to (i) read a matrix, (ii) find the sum of two matrices, (iii) find the productof two matrices, (i) find the transpose of a matrix and (v) display a matrix.

DAY 8

18. Find the factorial of a given natural number 'N' using recursive and non-

recursive functions.

(Last Day to complete all the pending programs **till DAY 8**)

DAY 9

19. Do the following using pointers

i) Add two numbers

ii) Swap two numbers using a user defined function

20. Input and Print the elements of an array using pointers.

21. Compute sum of the elements stored in an array using pointers and user defined function.

DAY 10

22. Create a file and perform the following

i) Write data to the file

ii) Read the data in a given file & display the file content on console

iii) Append new data and display on console

23. Open a text input file and count number of characters, words and lines in it; and store the results in an output file.

101908/PH922S

ENGINEERING PHYSICS LAB

RSET
RAJAGIRI SCHOOL OF ENGINEERING & TECHNOLOGY (Autonomous)

COURSE INFORMATION SHEET

COURSE CODE	COURSE NAME	COURSE DOMAIN	CORE OR ELECTIVE	BRANCH	L	T	P	CREDIT	YEAR OF INTRODUCTION
101908/ PH922S	ENGINEERING PHYSICS LAB	SCIENCE	CORE	AI&DS, AEI, CE, CSE, ECE, EEE, IT, ME	0	0	2	1	2021

1. Preamble

The aim of this course is to make the students gain practical knowledge to correlate with the theoretical studies and to develop practical applications of engineering materials and use the principle in the right way to implement the modern technology.

2. Prerequisite

Higher secondary level Physics

3. Syllabus

LIST OF EXPERIMENTS

(Minimum 8 experiments should be completed)

1. CRO- Measurement of frequency and amplitude of waveforms
2. Measurement of strain using strain gauge and Wheatstone bridge
3. LCR Circuit – Forced and damped harmonic oscillations
4. Melde's string apparatus-Measurement of frequency in the transverse and longitudinal mode
5. Wavelength measurement of a monochromatic source of light using Newton's Ring's method.
6. Determination of diameter of a thin wire or thickness of a thin strip of paper using air wedge method.
7. To measure the wavelength using a millimeter scale as a grating
8. Measurement of wavelength of a source of light using grating.
9. Determination of dispersive power and resolving power of a plane transmission grating

10. Determination of the particle size of lycopodium powder
11. Determination of the wavelength of He-Ne laser or any standard laser using diffraction grating
12. Calculate the numerical aperture and study the losses that occur in optical fiber cable.
13. I-V characteristics of Solar cell.
14. LED Characteristics.
15. Ultrasonic Diffractometer-Wavelength and velocity measurement of Ultrasonic waves in a liquid
16. Deflection magnetometer-Moment of a magnet- Tan A position.

4. Reference Books

1. S. L. Gupta and Dr. V. Kumar, *Practical physics with viva voice*, Pragati Prakashan Publishers, Revised Edition, 2009.
2. M. N. Avadhanulu, A. A. Daniand, P. M. Pokely, *Experiments in Engineering Physics*, S. Chand & Co, 2008.
3. S. K. Gupta, *Engineering physics practicals*, Krishna Prakashan Pvt. Ltd., 2014.
4. P. R. Sasikumar "Practical Physics", PHI Ltd., 2011.

5. Course Outcomes

After the completion of the course the student will be able to

CO1: Develop analytical/experimental skills and impart prerequisite hands-on experience for engineering laboratories
CO2: Understand the need for precise measurement practices for data recording
CO3: Understand the principle, concept, working and applications of relevant technologies and comparison of results with theoretical calculations
CO4: Analyze the techniques and skills associated with modern scientific tools such as lasers and fiber optics.
CO5: Develop basic communication skills through working in groups in performing the laboratory experiments and by interpreting the result

6. Mapping of Course Outcomes with Program Outcomes

	PO1	PO2	PO3	PO4	PO5	PO6	PO7	PO8	PO9	PO10	PO11	PO12
CO1	3				2			1	2			1
CO2	3				2			1	2			1

CO3	3				2			1	2			1
CO4	3				2			1	2			1
CO5	3				2			1	2			1

7. Assessment Pattern

Learning Objectives	Continuous Internal Evaluation (CIE)
Remember	30
Understand	50
Apply	20
Analyse	
Evaluate	
Create	

8. Mark Distribution

Total	CIE				ESE
	Attendance	Internal Examination	Daily Evaluation and viva	Total	
100	20	30	50	100	0

9. Internal Examination Pattern

There will be multiple choice questions of one and two marks. The total marks will be 30.

RSET
RAJAGIRI SCHOOL OF ENGINEERING & TECHNOLOGY
(Autonomous)

Engineering Physics Lab cycle 1/1

Sl No	Experiment	Name of the experiment
1	Experiment 1	LCR circuit
2	Experiment 2	Melde's string
3	Experiment 3	Newton's rings
4	Experiment 4	Spectrometer- Characteristic wavelengths
5	Experiment 5	Laser Diffraction Grating
6	Experiment 6	Solar Cell
7	Experiment 7	Numerical Aperture
8	Experiment 8	LiFi/Ultrasonic Diffractometer

OPEN QUESTIONS

RLC CIRCUIT

1. What does it mean to have a flat frequency response curve?
2. How does a microwave cavity work as resonant circuit like an RLC circuit?
3. How does a Joule thief circuit work?

CATHODE RAY OSCILLOSCSOPE

1. How can the brightness of the pattern on the screen of the cathode ray tube be changed?
2. How does a cathode ray tube in an LCD screen turn so bright?

NEWTON'S RINGS

1. Why does the fringes in Newton's rings crowd together as the radius of the fringe increases?
2. Why are Newton's rings circular?
3. How does Newton explained Newton's rings with corpuscular theory of light?
4. How a source which has specific frequency of vibration is able to produce waves of different wavelength?

AIR WEDGE

1. What happens when white or colored light is used for air wedge experiment?
2. What happens to the fringes in air wedge experiment when we apply stress?

SPECTROMETER EXPERIMENT

1. What are the differences between wavelength division multiplexing and time division multiplexing?
2. Do gravity waves have different lengths or frequencies like electromagnetic waves?
3. Why does a grating act as a super prism?

MALUS' LAW

1. A team of international researchers are working on developing a camera that can identify cancerous tissue. Which property of Mantis shrimp has inspired them?
2. Bats use echolocation to identify pray. But how do they navigate?

BOSE EINSTEIN CONDENSATION

1. At densities greater than that supported by degeneracy, the material inside a black hole convert from fermions to bosons. What type of boson is it?
2. Why at high temperature and low density, all statistics predict equivalently?

3. Why does quantum particles lose their distinguishability?

SCHRODINGER CAT PARADOX

1. Can gravity play a key role in destroying quantum superposition?
2. Will human teleportation ever possible?

MELDE'S STRING EXPERIMENT

1. Why are standing waves formed only when the medium is vibrated at specific frequencies?
2. Why are nodes alone formed at walls or boundaries?
3. Why are only antinodes formed at the open ends of a pipe?

LASER- DIFFRACTION GRATING

1. When we see an object, is it the diffracted image? If so, why we are not seeing more than one image at a time?
2. How can a photon having no mass and still travel?

I-V CHARACTERISTICS OF A SOLAR CELL

1. What type of electrical current I produced by solar panels. AC or DC?
2. Can we use solar panels to power a DC electric motor? How?
3. What limits the efficiency of solar cells?
4. What are the differences between solar panels and solar collectors?

NUMERICAL APERTURE OF AN OPTICAL FIBER

1. What happens when the numerical aperture of a fiber is zero?
2. How does the numerical aperture of a camera affect its resolution?

ADVANCED QUESTIONS

1. Why do we have equivalence between mechanical and electrical oscillators?
2. Why do we prefer phosphors for the production of photons in a CRT?
3. What is the difference between a spectrum analyzer and a cathode ray oscilloscope?
4. How do some smart phones enable us to see all of the emission spectra of light sources?
5. How certain wavelengths of light are used in forensic applications?
6. Which wavelength of light may fight fatigue round the clock?
7. Why do interference fringes due to air wedge have equal thickness?
8. Can gravitational waves from two or many events interact and cause constructive or destructive interference?
9. Why do radio waves and gamma rays pass through walls but visible light does not?
10. Does sound waves exhibit polarization?
11. Does Higg's Boson undergo Bose-Einstein condensation?
12. Does quantum entanglement provide communication at a velocity faster than that of light?
13. During an earth quake, buildings with a certain height may collapse more easily. Why?
14. What is the analogy between standing waves and matter waves?
15. Can you connect two computers with a laser data link?
16. How can solar cells bring a paradigm shift in the next generation energy production?
17. How is it possible to send a forward and backward message along the same cable?

RSET
RAJAGIRI SCHOOL OF ENGINEERING & TECHNOLOGY
(Autonomous)

Course Contents and Lecture Schedule
(Course Plan)

No	Topic	No. of Lectures
1	LCR Circuit – Forced and damped harmonic oscillations	3
2	Melde's string apparatus-Measurement of frequency in the transverse and longitudinal mode	3
3	Wavelength measurement of a monochromatic source of light using Newton's Ring's method.	3
4	Measurement of wavelength of a source of light using grating.	3
5	Spectrometer-Characteristic wavelengths	3
6	I-V characteristics of Solar cell.	3
7	LiFi/Ultrasonic Diffractometer	3
8	Numerical aperture of an optical fibre	3

101908/CO922U

ELECTRICAL AND ELECTRONICS WORKSHOP

COURSE INFORMATION SHEET

PROGRAMME: **ARTIFICIAL INTELLIGENCE AND DATA SCIENCE**	DEGREE: B.Tech
COURSE: ELECTRICAL AND ELECTRONICS ENGINEERING WORKSHOP	SEMESTER: 1 CREDITS: 1
COURSE CODE: **101908/CO922U** REGULATION: **2021**	COURSE TYPE: LAB
COURSE AREA/DOMAIN: INTRODUCTION TO ELECTRONICS ENGINEERING	CONTACT HOURS: 2 hours /Week.
CORRESPONDING THEORY COURSE CODE (IF ANY): 101908/CO900F	THEORY COURSE NAME: BASICS OF ELECTRICAL AND ELECTRONICS ENGINEERING

SYLLABUS (PART II):

UNIT	DETAILS	HOURS
1.	Familiarization/Identification of electronic components with specification (Functionality, type, size, colour coding, package, symbol, cost etc. [Active, Passive, Electrical, Electronic, Electro-mechanical, Wires, Cables, Connectors, Fuses, Switches, Relays, Crystals, Displays, Fasteners, Heat sink etc.)	4
2.	Drawing of electronic circuit diagrams using BIS/IEEE symbols and introduction to EDA tools (such as Dia or XCircuit), Interpret data sheets of discrete components and IC's, Estimation and costing.	2
3.	Familiarization/Application of testing instruments and commonly used tools. [Multimeter, Function generator, Power supply, DSO etc.] [Soldering iron, De- soldering pump, Pliers, Cutters, Wire strippers, Screw drivers, Tweezers, Crimping tool, Hot air soldering and de- soldering station etc.]	2
5.	Testing of electronic components [Resistor, Capacitor, Diode, Transistor and JFET using multimeter]	2
6.	Inter-connection methods and soldering practice. [Bread board, Wrapping, Crimping, Soldering - types - selection of materials and safety precautions, soldering practice in connectors and general purpose PCB, Crimping.]	2
7.	Printed circuit boards (PCB) [Types, Single sided, Double sided, PTH, Processing methods, Design and fabrication of a single sided PCB for a simple circuit with manual etching (Ferric chloride) and drilling.]	2
8.	Assembling of electronic circuits using SMT (Surface Mount Technology) stations.	2
9.	Assembling of electronic circuit/system on general purpose PCB, test and show the functioning (Any Two circuits).	2

	a. Fixed voltage power supply with transformer, rectifier diode, capacitor filter, zener/IC regulator. b. Square wave generation using IC 555 timer in IC base. c. Sine wave generation using IC 741 OP-AMP in IC base. d. RC coupled amplifier with transistor BC107.	
	TOTAL HOURS	N.A

TEXT/REFERENCE BOOKS:

T/R	BOOK TITLE/AUTHORS/PUBLICATION
1.	Grob's Basic Electronics/Mitchel Schultz/12th edition, McGraw-hill education, 2015.
2.	Electronic Devices and Circuits/Bell. D. A/Oxford University Press
3.	Electronic Devices and Circuit Theory/Boylested, R.L Nashelsky/Pearson Education
4.	Basic Electronic Devices, Circuits and Fundamentals/Kal. S/PHI Learning
5.	Electronics Circuit Analysis and Design/ Neeman D.A/ Tata McGraw Hill
6.	Microelectronic Circuits/Sedra A S and Smith K C/Oxford University Press

COURSE PRE-REQUISITES: NIL

COURSE OBJECTIVES:

1.	To enable the students to identify various electronic components and equipments.
2.	To get hands-on assembling, dismantling, testing, fabrication and repairing systems by utilizing the tools available in the workshop
3.	Familiarization with software tools for drawing circuits

COURSE OUTCOMES:

SL. NO.	DESCRIPTION
CO1.	Identify and test various electronic components
CO2.	Draw circuit schematics with EDA tools
CO3.	Assemble and test electronic circuits on boards
CO4.	Work in a team with good interpersonal skills

CO-PO-PSO MAPPING:

	Programme Outcomes (POs)												Programme-specific Outcomes (PSOs)		
	1	**2**	**3**	**4**	**5**	**6**	**7**	**8**	**9**	**10**	**11**	**12**	**1**	**2**	**3**
CO 1	3	-	-	-	-	-	-	-	-	-	-	2	2	-	-
CO 2	3	-	-	-	2	-	-	-	-	-	-	2	2	-	-
CO 3	3	-	-	-	2	-	-	-	-	-	-	1	2	-	2
CO 4	-	-	-	-	-	-	-	-	3	2	-	2	-	-	1

JUSTIFICATION FOR CO-PO-PSO CORRELATION:

MAPPING	**LOW/MEDIUM /HIGH**	**JUSTIFICATION**
CO.1- PO1	H	Application of knowledge of basic passive and active components
CO.1- PO12	M	Lifelong learning enables to keep up with the changes in society.
CO.1 – PSO1	M	Understand the fundamentals and testing of passive and active components.
CO.2- PO1	H	Application of engineering skills by using different equipments in electronics workshop.
CO.2 – PO5	M	Understands the usage of modern tools for the design of electronic circuits.
CO.2 – PO12	M	Team work can be a mandate for life-long learning.
CO.2 – PSO1	M	Knowledge and application of various fundamental laws in electronics, understand the operation of various testing equipment.
CO.3- PO1	H	Application of knowledge of breadboard, function generator and DSO to assemble electronic circuits.
CO.3 – PO5	M	Understands the usage of modern tools for the assembling and testing of electronic circuits
CO.3 – PO12	L	Motivate the students to further explore their knowledge in conducting independent experiments.
CO.3 – PSO1	M	Exposure to circuit connections and troubleshooting which help them in future.
CO.3 – PSO3	M	Working in a team to assemble, troubleshoot helps exhibit leadership qualities.
CO.4- PO9	H	Interpersonal skills can be improved by working together as a team.
CO.4- PO10	M	Working as a group enables the students to write effective reports and make effective presentations.
CO.4- PO12	M	Working as groups motivates the students to further explore their knowledge.
CO.4 – PSO3	L	Learning new techniques to adapt changes in industry.

GAPS IN THE SYLLABUS - TO MEET INDUSTRY/PROFESSION REQUIREMENTS:

SNO	DESCRIPTION	PROPOSED ACTIONS
1	Diode characteristics	Theory

PROPOSED ACTIONS: TOPICS BEYOND SYLLABUS/ASSIGNMENT/INDUSTRY VISIT/GUEST LECTURER/NPTEL ETC

TOPICS BEYOND SYLLABUS/ADVANCED TOPICS/DESIGN:

1.	Hobby circuits to practice using Tinkercad software

WEB SOURCE REFERENCES:

1	*https://nptel.ac.in/courses/117103063/*
2	*http://opencircuitdesign.com/xcircuit/*
3	www.electronics-tutorials.ws
4	*https://www.pcbway.com/blog/Engineering_Technical/Analysis_of_the_Methods_of_PCB_Interconnection.html*
5	*https://www.electronics-notes.com/articles/electronic_components/*

DELIVERY/INSTRUCTIONAL METHODOLOGIES:

☐ CHALK & TALK	~~☐ STUD. ASSIGNMENT~~	☐ WEB RESOURCES	
☐ LCD/SMART BOARDS	☐ STUD. SEMINARS	☐ ADD-ON COURSES	

ASSESSMENT METHODOLOGIES-DIRECT

~~☐ ASSIGNMENTS~~	~~☐ STUD. SEMINARS~~	☐ TESTS/MODEL EXAMS	~~☐ UNIV. EXAMINATION~~
☐ STUD. LAB PRACTICES	☐ STUD. VIVA	~~☐ MINI/MAJOR PROJECTS~~	~~☐ CERTIFICATIONS~~
~~☐ ADD-ON COURSES~~	~~☐ OTHERS~~		

ASSESSMENT METHODOLOGIES-INDIRECT

☐ ASSESSMENT OF COURSE OUTCOMES (BY	☐ STUDENT FEEDBACK ON FACULTY

FEEDBACK, ONCE)	(TWICE)
☐ ~~ASSESSMENT OF MINI/MAJOR PROJECTS BY EXT. EXPERTS~~	☐ ~~OTHERS~~

Prepared by **Approved by**

Ms.Remya K.R **(HOD)**

101908/CO922U: ELECTRONICS WORKSHOP

LAB CYCLE

CYCLE 1
Expt 1: Familiarisation, identification of passive components and testing using multimeter (resistors, capacitors and inductors)
Expt 2: Familiarisation, identification of active components and testing using multimeter.
Expt 3: Familiarisation of commonly used testing instruments and measuring equipments
Expt 4: Familiarization of switches, electromechanical relays and other electronic components
Expt 5: Familiarization of various testing instruments and commonly used components
CYCLE 2
Expt 6: Assembling of electronic circuit: Regulated DC power supply
Expt 7: Soldering and de-soldering practice, Assembling and Testing of Electronic Circuit on General Purpose PCB (Half wave rectifier)
Expt 8 - Assembling of electronic circuit: RC coupled amplifier
Expt 9 - Drawing circuits using EDA tools

OPEN EXPERIMENTS

1. Obtain the following wave form on DSO using active and passive components.

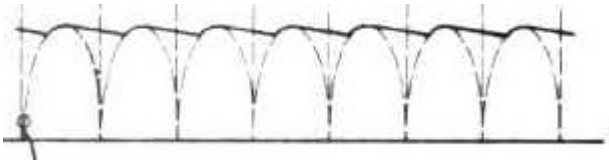

2. Obtain the waveform on DSO using active and passive components.

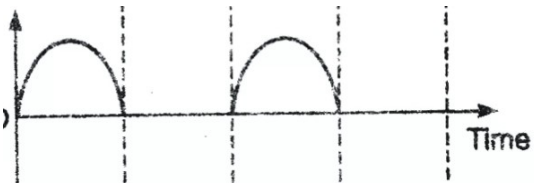

3. Obtain the wave form on DSO using active and passive components.

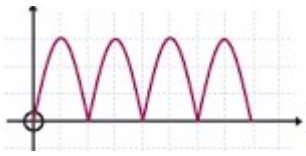

4. Obtain the waveform using Tinkercad software.

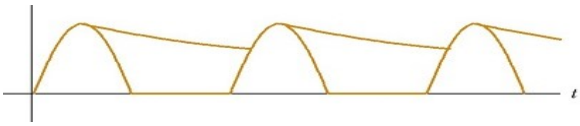

5. Obtain the value of the following circuit theoretically &practically?

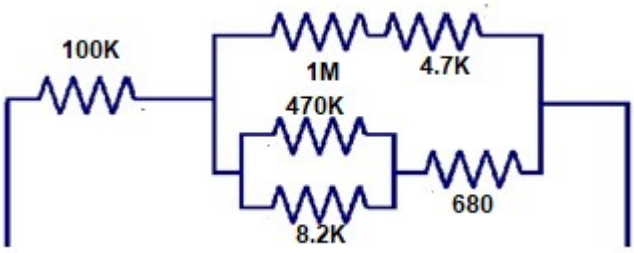

6. Obtain the value of the following circuit practically and theoretically?

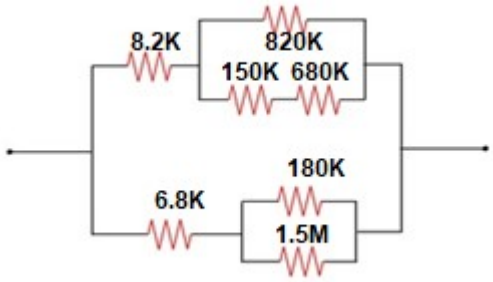

7. Set up the Half Wave rectifier circuit with filter and obtain the output wave form?

8. Set up the Full Wave rectifier circuit with filter and obtain the output wave form?

9. Obtain the following wave form(1) 1Khz sine wave with 40mVpp(2) 10KHz Square wave with 15Vpp(3) 0.5MHz Triangular wave with 2.5Vpp.

10. Obtain the waveform

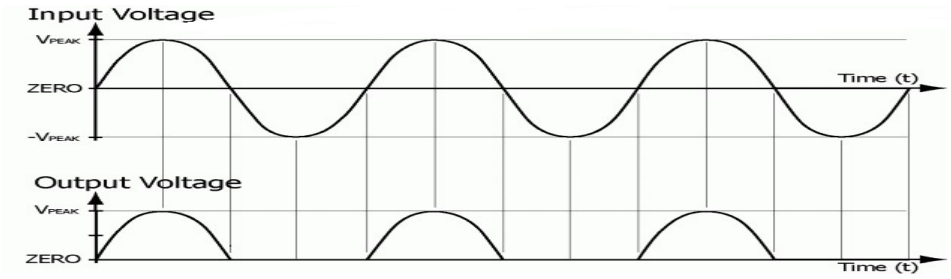

11. Obtain the following wave form(1) 500Hz sine wave with 40mVpp(2) 1MHz Square wave with 15Vpp(3) 0.5MHz Triangular wave with 2.5Vpp.

12. Obtain the value of the following circuit practically and theoretically?

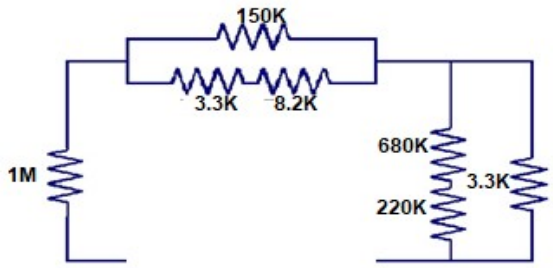

13. Obtain the value of the following circuit practically and theoretically? R1=R4=100K; R2=R5=150K; R3=680K

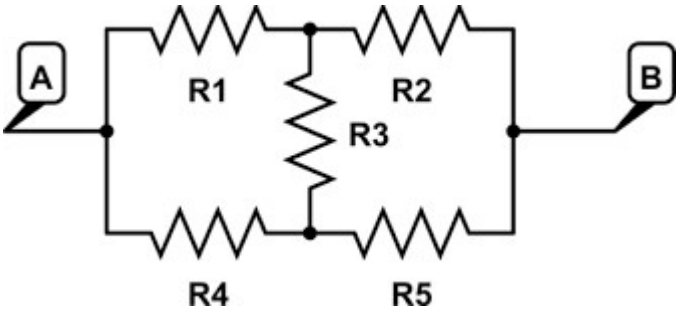

14. Obtain the value of the following circuit practically and theoretically? R1=R4=150K; R2=R5=680K; R3=150K

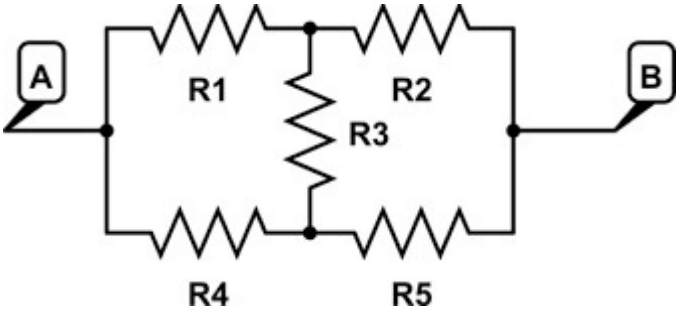

15. Find the value of Resistor $R_T$practically & theoretically?

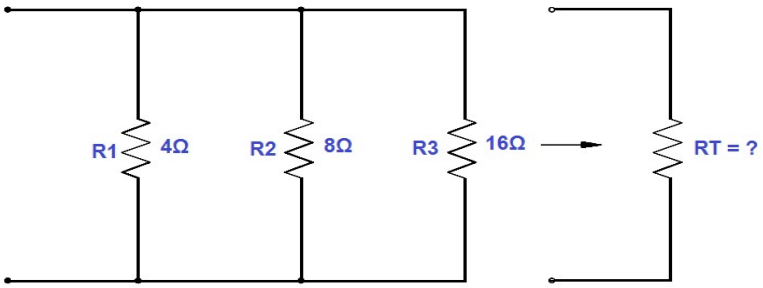

16. Find the value of Resistor $R_T$practically & theoretically?

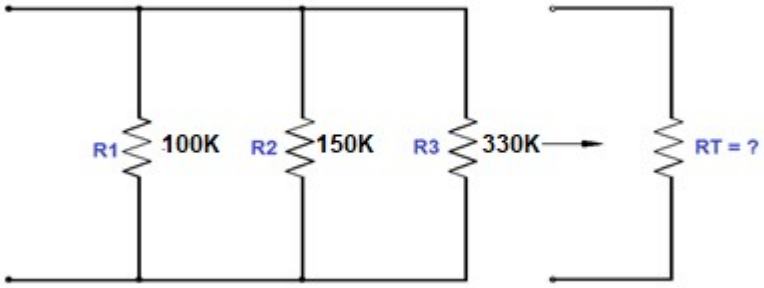

17. Obtain the value of the following circuit practically & theoretically?R1=R4=1M; R2=R5=R3=820K

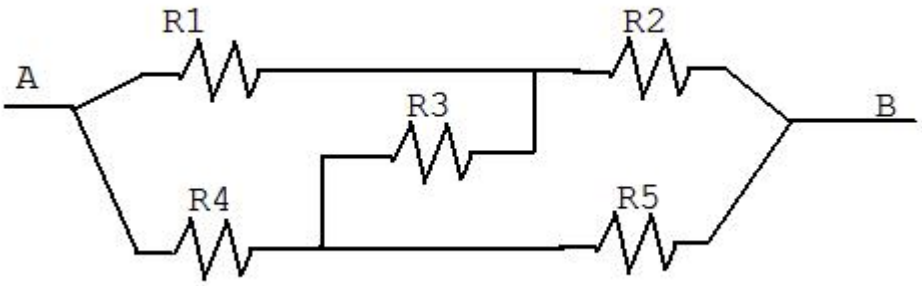

18. Obtain the following waveform

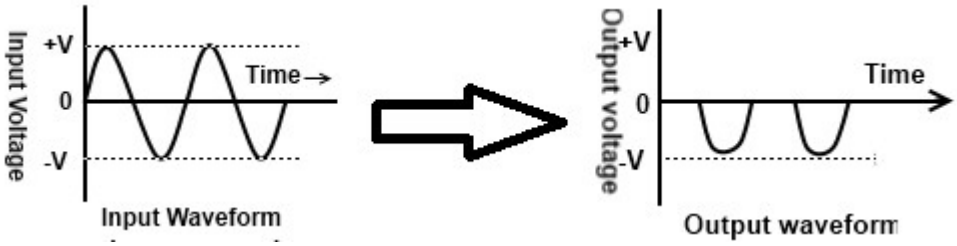

26. What will be the output of the following circuit?

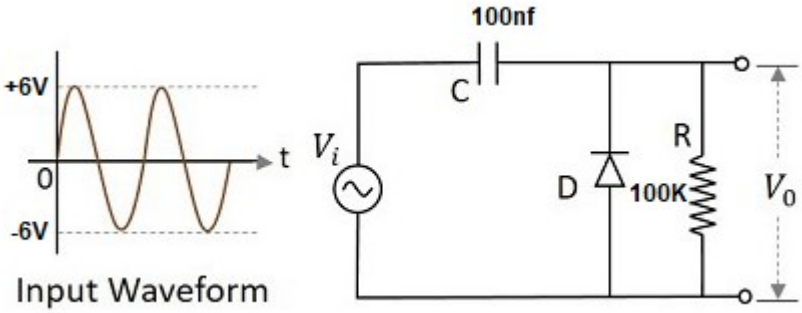

19. Find out the R_{EQ} of the circuit

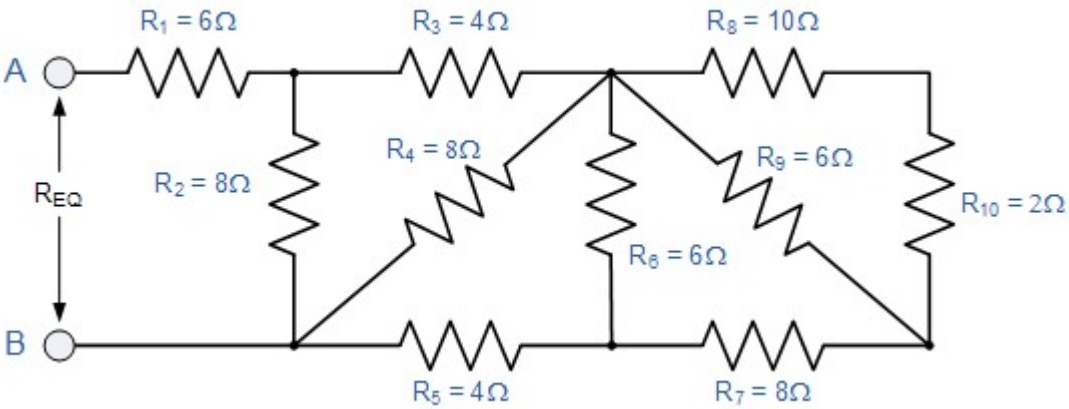

ADVANCED EXPERIMENTS

1. A box contains resistors with color band yellow, violet, orange and silver. What is the maximum and minimum value that can be obtained from the above resistor?
2. Given a 2 Ω 2W resistor. Theoretically what is the maximum possible current that you can pass through it?
3. Draw the symbols for a diode and show the possible direction of current through it.
4. What is the maximum (approximate) voltage that can be obtained at the output of a RC coupled amplifier with a gain of 100 and input of 1 V. The circuit is powered using a DC power supply.
5. On the CRO screen you see a sinusoidal wave form which reads 5div peak – peak on vertical scale and 2 div peak-peak on horizontal scale. How will you get the amplitude and period? What is the unit of frequency and what is its symbol? What is the frequency of a wave with a period of 20ms?
6. You are provided with an LED (non-transparent) and the legs are of equal length. How can you distinguish P and N.
7. Name any circuit in which 1N4007 is used. Draw the circuit
8. Draw the circuit used to convert AC to DC
9. Compare the advantages and disadvantages of dot type PCB and line type PCB.
10. Name & draw the circuit which is used to amplify sine wave.
11. Channel 1 of CRO is provided with a signal A and channel 2 with signal B. write the steps to be done to obtain A+B adb A-B on CRO
12. Discuss any five use of multi meter
13. Write all the steps to be done to measure the current flowing through R_{cd2} using multimeter
14. What all signals can be generated from a function generator? Name any 2 practical circuit tha can be used to generate any of the above 2 signal.
15. Write color code for 1200 Ω ±10%
16. Given a 4 Ω 3W resistor. Theoretically what is the maximum possible current that you can pass through it?
17. A box contains resistors with color band brown, black, orange and gold. What is the maximum and minimum value that can be obtained from the above resistor?

COURSE PLAN

Day 1 - Expt 1: Familiarisation, identification of passive components and testing using multimeter (resistors)

Day 2 - Expt. 1 contd: Familiarisation, identification of passive components and testing using multimeter (capacitors and inductors)

Day 3 - Expt 2: Familiarisation, identification of active components and testing using multimeter

Day 4 - Expt 3: Familiarization of switches, electromechanical relays and other electronic components

Day 5 -Expt4: Familiarisation of commonly used testing instruments and measuring equipments

Day 6 - Expt 5: Familiarisation of bread board and multimeter- Assembling simple circuits like series/parallel resistance and voltage divider circuit on breadboard and measuring effective resistance and voltage using multimeter.

Day 7 - Expt 6: Assembling of electronic circuit: Half wave and full wave Rectifier

Day 8 - Expt 7: Verification of Ohm's Law using Tinkercad

Day 9 - Expt 8: Soldering and de-soldering practice, Assembling and Testing of Electronic Circuit on General Purpose PCB (Rectifiers and RC coupled amplifier)

Day 10 – Repeat Lab